CITY COUNCIL MEETING

COUNCIL CHAMBERS, 33 SOUTH MAIN STREET, COLFAX, CA

MAYOR TOM PARNHAM • MAYOR PRO-TEM STEVE HARVEY
COUNCILMEMBERS • KIM DOUGLASS • TONY HESCH • WILL STOCKWIN

REGULAR MEETING AGENDA
October 26, 2016
Regular Session 7:00 PM

1) OPEN REGULAR MEETING

1A. **Call to Order**

1B. **Pledge of Allegiance**

1C. **Roll Call**

1D. **Approval of Agenda Order**

This is the time for changes to the agenda to be considered including removal, postponement, or change to the agenda sequence.

RECOMMENDED ACTION: By motion, accept the agenda as presented or amended.

2) PRESENTATION

2A. **Report from Winterfest Event Organizers**
Gary Howard and Kelly Molloy

2B. **Presentation regarding Measure L**
Paul Lundberg, Colfax High School Principal

3) CONSENT CALENDAR

Matters on the Consent Agenda are routine in nature and will be approved by one blanket motion with a Council vote. No discussion of these items ensues unless specific items are pulled for discussion and separate action. If you wish to have an item pulled from the Consent Agenda for discussion, please notify the City staff.

RECOMMENDED ACTION: Approve Consent Calendar

3A. **Minutes City Council Meeting of September 28, 2016**
Recommendation: Approve the Minutes of the Regular Meeting of September 28, 2016.

3B. **Cash Summary Report – September 2016**
Recommendation: Receive and File.

4) COUNCIL, STAFF AND OTHER REPORTS

The purpose of these reports is to provide information to the Council and public on projects, programs, and issues discussed at committee meetings and other items of Colfax related information. No decisions will be made on these issues. If a member of the Council prefers formal action be taken on any committee reports or other information, the issue will be placed on a future Council meeting agenda.

4A. **Committee Reports and Colfax Informational Items - All Councilmembers**

4B. **City Operations Update – City staff**

4C. **Additional Reports – Agency partners**

5) PUBLIC COMMENT

Members of the audience are permitted to address the Council on matters of concern to the public within the subject jurisdiction of the City Council that are not listed on this agenda. Please make your comments as brief as possible; not to exceed three (3) minutes in length. The Council cannot act on items not included on this agenda; however, if action is required it will be referred to staff.

6) COUNCIL BUSINESS

6A. **Proposal from Mink Creek HOA**
PRESENTATION: Al Turner, Mink Creek HOA President
RECOMMENDATION: Accept proposal from Mink Creek HOA for discussion in Closed Session at the November 9, 2016 Regular Meeting.

6B. **Volunteer Fire Department Emergency Response Vehicle (Squad 36) Replacement**
PRESENTATION: Ty LaBelle, Colfax Fire Department Battalion Chief
RECOMMENDATION: Adopt Resolution 44-2016 authorizing the City Manager to enter into a lease/purchase agreement with Burton-Rosenbauer Fire Equipment for an emergency response vehicle (Squad 36).

6C. **Sewer Inspection Camera and Locator System**
PRESENTATION: John Schempf, City Manager
RECOMMENDATION: Adopt Resolution 45-2016 authorizing the City Manager to enter into a purchase agreement with Ferguson Enterprises, Inc. for a sewer inspection camera and locator system.

6D. **Centennial Dam Economic Impacts on the City of Colfax**
PRESENTATION: John Schempf, City Manager
RECOMMENDATION: For information only.

6E. **Old Colfax Hotel Update**
PRESENTATION: John Schempf, City Manager
RECOMMENDATION: For information only.

7) ADJOURNMENT

I, Lorraine Cassidy, City Clerk for the City of Colfax declare that this agenda was posted at Colfax City Hall and the Colfax Post Office. The agenda is also available on the City website at www.Colfax-ca.gov.

Lorraine Cassidy, City Clerk

Administrative Remedies must be exhausted prior to action being initiated in a court of law. If you challenge City Council action in court, you may be limited to raising only those issues you or someone else raised at a public hearing described in this notice/agenda, or in written correspondence delivered to the City Clerk of the City of Colfax at, or prior to, said public hearing.

IN HISTORIC DOWNTOWN COLFAX
Colfax Winterfest
SATURDAY DECEMBER 10TH 6–9PM
DOWNTOWN COLFAX
EVENT INCLUDES: STREET VENDORS, TREE LIGHTING, PARADE OF LIGHTS,
CAROLING, HOLIDAY SHOPPING, PICTURES WITH SANTA, LIVE NATIVITY
CHESTNUT ROASTING, AND A FIREWORKS SPECTACULAR!!
HOPE TO SEE YOU THERE!

PLACER UNION HIGH SCHOOL DISTRICT

MEASURE L

FREQUENTLY ASKED QUESTIONS

PLACER UNION HIGH SCHOOL DISTRICT

What Is Measure L?

Measure L is a $98 million general obligation (G.O.) bond that will be on the November 8 Presidential Election ballot. If approved, the measure will improve, construct, and rehabilitate schools and classrooms throughout the District to meet the challenges of today's rapidly changing world.

What Is A G.O. Bond?

G.O. bonds are commonly used by school districts statewide to fund projects such as the renovation of existing classrooms and the construction of new classrooms and facilities. Similar to a home loan, G.O. bonds are typically repaid over a period of time. Funds to repay the bonds come from a tax on all taxable property – residential, commercial and industrial – located in the District.

What Will Be Funded By Measure L?

The measure authorizes improvements in classrooms and schools throughout Placer Union High School District, including:

- Expanding Science, Technology, Engineering, Art and Math (STEAM) classrooms
- Upgrading and expanding career technical education facilities
- Repairing and replacing aging roofs
- Updating fire alarms and emergency communication systems
- Improving classroom and campus safety and security
- Upgrading and replacing outdated heating and air-conditioning systems
- Constructing and modernizing science labs

Why Is Measure L Needed?

State funding has fallen short of our children's educational needs. This measure solves that problem by providing a source of locally controlled, affordable funds that cannot be taken by the State and spent elsewhere. Measure L will also make the District eligible for State matching funds.

How Were Measure L Needs Determined?

The projects to be funded by Measure L were identified through a year-long, comprehensive master facility planning process that involved parents, teachers, principals, students, community members, architects and engineers. The Board further prioritized the projects to develop the Measure L project list.

How Much Will Measure L Cost?

The average tax rate required to repay Measure L is estimated to be $26.54 per $100,000 of assessed valuation per year ($2.21 per month). *Assessed valuation should not be confused with market value. Assessed valuations are the value placed on the property by the County at the time a property is sold or undergoes a major renovation and, typically, is lower than market value.* The estimated total cost of Measure L, including principal and interest, is $128.3 million.

What Protections Are In Place To Ensure Measure L Funds Are Used Responsibly?

An independent Citizens' Oversight Committee must review and audit all bond expenditures. By law, bond funds cannot be used to pay administrator salaries, pensions or benefits. Legal safeguards prohibit the State from taking these funds and spending them elsewhere.

More information is available online at www.puhsd.k12.ca.us.
Peter Efstathiu | 530-886-4410 | pefstath@puhsd.k12.ca.us

City of Colfax
City Council Minutes
Regular Meeting of Wednesday, September 28, 2016
City Hall Council Chambers
33 S. Main Street, Colfax CA

1 CONVENE CLOSED SESSION

1A. **Call to Closed Session to Order**
Mayor Parnham called the meeting to order at 6:30PM.

1B. **Roll Call**
Council members present: Douglass, Harvey, Hesch, Parnham, Stockwin
Council members absent:

1C. **Public Comment – Closed Session Items.**
No public was present so there was no public comment on closed session items.

1D. **Closed Session Agenda:** Public employee performance evaluation pursuant to Government Code Section 54957. Title: City Manager.
The City Council convened in closed session as reflected on the posted agenda.

The Council emerged from closed session at 7:00 p.m. Mayor Parnham announced that there was no reportable action.

2 OPEN SESSION

2A. **Call to Open Session to Order**
Mayor Parnham called the meeting to order at 7:05PM.

2B. **Pledge of Allegiance**
Community Services Director Wes Heathcock led the Pledge of Allegiance.

2C. **Roll Call**
Council members present: Douglass, Harvey, Hesch. Parnham, Stockwin

2D. **Approval of Agenda Order**
On a motion by Councilmember Stockwin, seconded by Councilmember Hesch, the City Council approved the agenda.
AYES: Douglass, Harvey, Hesch, Parnham, Stockwin

3 CONSENT CALENDAR

3A. **Minutes of the City Council Meeting of September 14, 2016**
Recommendation: Approve the Minutes of the Regular Meeting of September 14, 2016.

3B. **Cash Summary Report – August 2016**
Recommendation: Receive and File.

3C. **City of Colfax Conflict of Interest Code Update**
Recommendation: Approve Resolution 40-2016.

Councilmember Stockwin pulled Item 3C for clarification

On a motion by Councilmember Hesch, seconded by Councilmember Harvey, the City Council approved Items 3A and 3B the agenda.
AYES: Douglass, Harvey, Hesch, Parnham, Stockwin

3C. **City of Colfax Conflict of Interest Code Update**
Recommendation: Approve Resolution 40-2016.

Councilmember Stockwin questioned the wording of the third WHEREAS on draft Resolution 40-2016, and specifically the "r" in the second line. The City Attorney explained that the "r" is a typographical error that should be "revise".

On a motion by Councilmember Stockwin and a second by Councilmember Hesch, the Council unanimously adopted Resolution 40-2016.
AYES: Douglass, Harvey, Hesch, Parnham, Stockwin

4 COUNCIL, STAFF, AND OTHER REPORTS

4A. **Committee Reports and Colfax Informational Items – All Councilmembers**

Councilmember Hesch

- Councilmember Hesch was contacted by a business owner regarding roadside cleanup ideas. He passed the information on to staff.
- He attended the WACMAC meeting and heard a report on early planning for housing and services for the homeless.
- He worked on the caboose roof and will remain active but will probably not serve as project manager once the caboose is painted.
- He attended the community meeting/barbeque at the Depot, complimented the presentation and said this was the best meeting he has attended in a long time.
- He attended PCTPA this morning and reported that pre-planning has started. They are looking for problems in area transit and asked for community input. PCTPA's telephone numbers are (530)346-9179 for normal reporting and (530)718-1884 for the transit problems hotline.
- He reported that Vallejo rejected a permit for fracking at a Vallejo refinery. Oil from that fracking would have passed through Colfax.

Councilmember Stockwin

- Councilmember Stockwin reported that there will be a string quartet at the landfill on September 29 from 5:30 p.m. to 7:30 p.m.
- He also complimented the quality of the community meeting at the Depot.

Councilmember Douglass

- Councilmember Douglass represented the City at the September 15 SACOG meeting. He reported that a new nationally-known director from the Washington DC area has been appointed.
- He attended Project Go in Roseville on September 15. He reported that there are 1% loans available for home insulation and similar projects.
- On September 16, he attended the art walk, which included chalk art on the sidewalks.
- On September 17, he attended the Heritage Museum meeting at which various housekeeping items were discussed.
- On September 19, he met with representatives of the middle school and high school to promote Measure L which, if passed, will produce $90 million for local schools. The next meeting is October 3, 2016 at 6:00 p.m.

- On September 21, he attended a meeting at Sierra Vista Community Center. Mr. Douglass is a SVCC Board member. Mr. Hesch is his alternate.
- On September 22, he attended a meeting of the animal control board with Mr. Stockwin. He said Colfax is considering taking over local animal control enforcement and saving approximately $30,000 per year. A local veterinarian is considering how he can be of assistance.
- On September 24, he attended a meeting of the Libertarian Party in Sacramento at which Measure L was discussed.
- On September 26, he attended a meeting with Sergeant Ty Conners
- A few hours before this Council meeting, he met with representatives of the Harvest Craft Fair and reported that this will be the first annual fruit carving contest. Prizes will be awarded.

Mayor Pro Tem Harvey

- Mayor Pro Tem Harvey noted that he has seen television broadcasts of unrest between citizens and police officers. It seems that most of the problems result from people not obeying the officers' orders. It is very important to teach children to do what a police officer tells them to do, and that doing so may save a life.

Mayor Parnham

- Mayor Parnham also attended the meeting at Sierra Vista Community Center.
- He reported that emergency alerts can be received on a cell phone.
- He reported on the art walk and noted that it was well attended.

4B. **City Operations – City Staff**

City Manager Schempf

- City Manager Schempf complimented staff on the excellent job they did while he was on vacation.
- He met with CalFire representatives, noted that the available fire assets are incredible and said that Colfax is blessed to have so many police and fire assets available in a small community.
- He reported that the City issued a request for proposals for engineering services. Six proposals were received; three firms were interviewed. The contract for the winning candidate is on tonight's agenda.
- He also complimented Sergeant Conners on the community meeting.
- At his request, Wes Heathcock reported that he investigated the flagpole issue raised at the last meeting. It will cost approximately $19,000 to bring water to the planter area. Jerry Bartlett said that the rock around the flagpole had been done a few years ago. When they were done, Mark Miller agreed to take over watering, and then he retired so nobody watered for some time. They are going to redecorate with gold panning equipment and other things that do not require water. They would like someone to pull the dead plants. Mr. Harvey said this was looked at in 2010 when the cost to bring water in was $4,000 cheaper but the City had no money to spare.
- At the City Manager's request, the City Attorney explained that regulatory fees related to the proposed marijuana ordinance can only reflect the reasonable cost of providing service. At this point, the City is legislating. The cost of legislating cannot be considered when establishing the regulatory fees.

4C. **Additional Reports – Agency Partners**

Frank Klein, Colfax Area Chamber President

- Mr. Klein commended Sergeant Conners for the community meeting. He said it was attended by 100-120 Colfax residents.
- He reiterated that the next Chamber mixer will be at the landfill on September 29 from 5:30 p.m. to 7:30 p.m.

Sergeant Ty Conners, Placer County Sheriff's Office Colfax Substation Commander

- Sergeant Conners thanked the community for supporting the meeting. He may do meetings every 4 – 6 months and wants input on how to improve them.
- A decomposed male body was found behind the veterinary clinic by a PG&E worker. An investigation is ongoing and they are awaiting DNA results.
- He reported that the skate park is moving toward final design.
- A meeting to discuss evacuation plans will be held on September 29 at the Alta fire station.
- Some of his deputies have been sent to the Yosemite area to search for a missing 74 year old hiker.
- Newly hired Deputy Jose Jacinto was introduced. Deputy Jacinto made a few remarks and is happy to serve the Colfax community.
- He thanked Councilmember Harvey for his comments and reiterated that most incidents would not occur if people followed an officer's orders.

5 PUBLIC COMMENT

Ken Ahrens, City resident

- Mr. Ahrens discussed the poor condition of City streets and asked whether the City has a contingency plan if Measure M fails. The approximately $100,000 the City currently receives is not enough and although $250,000 per year from Measure M will help, it will still not be enough to make a difference.

Rene Abbott, area resident and reporter for the Colfax Record

- Ms. Abbott, who lives on Grandview, said that the landfill is not an amphitheater.
- She informed Council that telephone numbers for local contacts will be printed in one or more of her articles.
- She requested a key for the VFW to be able to put flags at half-mast as appropriate.

6 COUNCIL BUSINESS

6A. **Event Application: Fall Festival**

STAFF PRESENTATION: John Schempf, City Manager

RECOMMENDATION: Adopt Resolution 41-2016 authorizing the use of public areas and the closure of certain streets for a Fall Festival.

City Manager Schempf noted that a representative from Green Machine was not present so he introduced the item. He explained that this is a new festival that will raise funds for the academic side of the school. It will include food and a beer garden. The City Manager recommended approval.

Councilmember Harvey said that this is a great event that he supports. Councilmember Stockwin asked for an explanation of "Trunk or Tree". Wes Heathcock explained that Trunk or Treat is conducted in the parking lot. Participants decorate their trunks for Halloween like a house. It lasts until everyone runs out of candy.

There was no public comment on the item.

On a motion by Councilmember Harvey, seconded by Councilmember Hesch, Council adopted resolution 41 – 2016.
AYES: Douglass, Harvey, Hesch, Parnham Stockwin

6B. **Event Application: Homecoming Parade**
STAFF PRESENTATION: John Schempf, City Manager
RECOMMENDATION: Adopt Resolution 42–2016 authorizing the use of public areas and the closure of certain streets for a Homecoming Parade**.**

City Manager Schempf noted that a representative from the school was not present so he introduced the item. A permit has been requested for a homecoming parade that will follow a relatively short route and will require temporary street closures and police assistance. He thinks it will be a worthwhile opportunity to welcome the graduates home. Councilmember Douglass said that there will be several floats from the elementary and high schools, and a team challenge. Floats are encouraged. City Manager Schempf said that the floats will be escorted back. Traffic may be a bit of a problem because this is a game day.
Councilmember Hesch asked that the float operators be reminded not to enter the railroad crossing unless it is clear.

There was no public comment on the item.

On a motion by Councilmember Hesch and a second by Councilmember Harvey, Council adopted Resolution 42–2016.
AYES: Douglass, Harvey, Hesch, Parnham Stockwin

6C. **City Engineering Consultant Services**
STAFF PRESENTATION: Wes Heathcock, Community Services Director
RECOMMENDATION: Adopt Resolution 43-2016 authorizing the City Manager to enter into an agreement with Coastland Civil Engineering, Inc., for City Engineering Services.

Mr. Heathcock introduced the item. A request for qualifications was issued. Six responses were received. Coastland was determined to be the most qualified to serve as City Engineer. Mr. Heathcock has worked with Coastland in other agencies. His experiences with Coastland have been positive.
Dane Schilling, Coastland's managing engineer, represented Coastland. Their home office is in Santa Rosa and has been in business for 25 years. Their branch office in Auburn has been in business for 11 years. Mr. Schilling lives in Grass Valley and manages the Auburn office which has 12 staff members. Travis Williams, Coastland's construction manager, was present. He is a licensed professional engineer who runs Coastland's inspection division. SP Mann, Coastland's Capital Projects & Funding Manager was also present. Mr. Mann is a licensed professional engineer with 21 years of experience as an engineer, 14 of which were with the City of Rocklin. Other engineers within the firm are experienced in water and wastewater issues. The firm has admired Colfax for some time and is pleased to be considered for the appointment. They understand that Colfax has limited resources and they will be here as needed.

Councilmember Hesch complemented Coastlands excellent RFP.
Councilmember Stockwin asked if anyone had ever worked with Coastland. Mr. Stockwin said Coastland was working for the City when he applied for a conditional use permit. Mr. Stockwin's biggest complaint was that every time he walked into the City's building department, he encountered a different face from Coastland that did not know what he was doing. There seemed not to be sufficient communication within the firm. Most of the engineers were from Santa Rosa, but Mr. Stockwin experienced a plan checking nightmare on his conditional use permit. It seemed like nobody ever read the permit. The Coastland representatives changed often and Colfax did not have sufficient staff to supervise them. Mr. Stockwin noted that he did not recognize any of the Coastland names from his conditional use permit experience on the current roster of Coastland staff and asked Mr. Heathcock to closely supervise Coastland's work.
Councilmember Hesch reviewed the section on page 10 of Coastland's contract regarding ownership of information. He asked the City Attorney to write language requiring as-built drawings to be delivered before final payment to the engineer on projects requiring as-builts. Mr. Hesch also asked whether Coastland can provide assistance with the City's financial resources. Mr. Heathcock said that Coastland can help the City apply for grants.
Councilmember Douglass said it is nice to do business with a local company and his goal is to increase the number of local vendors.
Councilmember Harvey agreed with Councilmember Hesch and mentioned the difficulties when a former engineering firm was replaced. The new engineer would not accept what the former engineer had done and the costs were higher than they should have been. It is important to have final plans on everything. Mr. Heathcock said that as-builts become the City's property upon receipt Mr. Heathcock will obtain records from the City Engineer being replaced.

On a motion by Councilmember Harvey and a second by Councilmember Hesch, Council adopted Resolution 43 – 2016.
AYES: Douglass, Harvey, Hesch, Parnham Stockwin

6D. **Caboose Maintenance Proposal**
STAFF PRESENTATION: John Schempf, City Manager
RECOMMENDATION: Discuss and direct staff as appropriate.

City Manager Schempf stated that the easiest way to address this is to use the lease form that is used for tenants in the passenger depot.
Mr. Hesch agrees and has a few ideas to contribute. Mr. Hesch volunteered to serve on the committee. Council directed staff to move forward.

6E. **Ordinance 529: Medical Marijuana Ordinance – Second Reading**
STAFF PRESENTATION: John Schempf, City Manager
RECOMMENDATION: Consider public and staff comments and Adopt Ordinance 529 and waive reading of the entire ordinance and read by title only; to become effective subject to approval at the November 8, 2016general election of measure H by 2/3 of the voters.

City Manager Schempf said the changes requested at the last meeting have been incorporated. He just received information published by the League of California Cities regarding the proposed recreational use of marijuana to be considered on the November ballot. There is some carryover so the City's proposed ordinance, if passed, will fit. The

City can borrow the League's language when adopting its regulations, recognizing the State will provide primary guidance. If passed, recreational use will go into effect on November 9, 2016 but medical marijuana regulations will not be effective until 2018. The City Attorney explained that Colfax can probably adopt interim regulations for medical marijuana facilities.

Stacey Younggren reminded the Council that the State will not issue licenses until 2018 and there are five instances in the proposed Colfax ordinance that required state licenses. The City will have to determine what to do if the Colfax measure passes.

Mr. Brown wants to give everyone a united voice for cannabis regulation. He hopes that marijuana dispensaries will be looked at as any other business because they can provide a good example. He believes that the regulated community can follow through on everything required of it.

Larry Hillberg recognized the Council and staff for the tremendous amount of effort put into this ordinance. He mentioned a news article that discussed successful infusion of cannabis into wine. He believes the war on drugs focused on supply, not demand. Other drugs are more dangerous than marijuana and need stricter regulation.

Rich Miller thanked the Council for moving things forward. Since a similar measure did not pass in Placer County, Colfax should reap the rewards of allowing marijuana dispensaries. He encouraged everyone to visit a properly run dispensary. The State will have no regulations in place for about two years but the City can develop local permitting regulations. He believes it is imperative to get regulations on the books. This should be a windfall for Colfax and provide sufficient money to take care of sewers and roads.

Eli Beardsley suggested using some of the money for a mental health clinic.

Councilmember Stockwin commented that the City can adopt local regulations to provide for medical marijuana availability while the State is developing its regulations.

On a motion by Councilmember Stockwin and a second by Councilmember Douglass, Council waived the second reading and adopted Ordinance 529, to become effective subject to approval at the November 8, 2016general election of Measure H by 2/3 of the voters.

AYES: **Douglass, Parnham Stockwin**
NOES: **Harvey, Hesch**

Mr. Hesch thanked everyone because he has learned quite a bit during this process. It is unfortunate that this issue has been hijacked by special interests. He said that certain procedures have been tossed out thanks to those special interests.

The City Manager said that majority rules on this action, that the ordinance contains all necessary protections and restrictions, and that various unnecessary provisions have been removed based on Council comments.

6F. **Ordinance 530: Mobile Home Ordinance – Second Reading**

STAFF PRESENTATION: John Schempf, City Manager

RECOMMENDATION: Consider public and staff comments and Adopt Ordinance 530 and waive reading of the entire ordinance and read by title only to become effective in 30 days.

City Manager Schempf introduced the item and said that nothing had changed since the first reading of this proposed Ordinance. It is before the Council for second reading and adoption.
Councilmember Stockwin asked what factors contributed to development of this proposed ordinance. City Manager Schempf explained that the owner has been reluctant to pay the required permit fees and penalties. The permit fees have been paid but the penalty, which is equal to the fees, has not been paid. In order to collect, the City would have to take the owner to Small Claims Court.
Councilmember Harvey asked whether his ordinance will affect enforcement of matters pertaining to the Mink Creek subdivision. The City Attorney said it will not.

On a motion by Councilmember Stockwin and a second by Councilmember Douglass, Council waived the second reading and adopted Ordinance 530.
AYES: **Douglass, Harvey, Parnham Stockwin**
NOES: **Hesch**

6G. **Centennial Dam Economic Impacts on the City of Colfax**
STAFF PRESENTATION: John Schempf, City Manager
RECOMMENDATION: Discuss economic impacts of the Centennial Dam and a Response to the Nevada Irrigation District and provide guidance to staff.

City Manager Schempf introduced the item and said the City has the opportunity to comment on the Centennial Dam by addressing the impacts on Colfax.
Councilmember Harvey said the Centennial project will affect at least the economic and circulation elements of the Colfax General Plan and NID should pay for updating both.
Councilmember Stockwin asked for clarification regarding who will run the new campground. According to CalFire, the state will run the rivers but it is not clear who will run the campground itself.
Councilmember Douglass suggested that the City should expand its sphere of influence.
Councilmember Harvey agreed that the City should expand its sphere of influence if it can do so.
Councilmember Stockwin analyzed the number of campsites and the potential lost revenue to the City. One facility has 23 individual campsites which are rarely empty. Campers can stay for a week. Assuming all 23 campsites are occupied for 30 days per month, there are 690 paid sites per month. If there are eight occupants per site, it is reasonable to assume, especially because there is no potable water at the campsite, that all of those campers must come to town. Using very conservative numbers, if each camper coming to town spends $50 in Colfax, it will produce $34,500 per month for Colfax businesses. It will be $69,000 if each camper spends $100. In the group campground there have typically been 39 groups per season for the last four years. Each brings an average of 100 people. If that number is cut to 50, there will be 1950 campers over the summer. If each camper spends $25 in Colfax, that will generate $48,500 to Colfax businesses, and $97,500 if they spend $50 each. This means that the loss of both campgrounds will cause a substantial financial loss to Colfax that should be compensated.
Councilmember Stockwin also discussed the possible Dog Bar realignment. NID purchased property at the bottom of Ben Taylor, and may use that in lieu of the Dog Bar Bridge.

Councilmember Hesch agrees that NID should pay for updating the circulation and traffic elements of the Colfax General Plan, for traffic, disruption and other recreational losses. City Manager Schempf mentioned that there is no sign at the Colfax exit that identifies the campground. He will explore the possibility of having one installed.

Members of the public made the following comments:
Josh Alpine, who is a member of the LAFCO Board of Directors, said the City is on the right track. He recommended a traffic study, quality of life study and natural resources study. Whether or not Centennial Dam is built, NID owns 62% of the land in the Centennial Dam footprint. The reservoir may fail but NID will still own the land. This will cause a substantial loss in revenue to the City. He also suggested the City consider fire protection, loss of tax revenue and loss of the City's ability to grow. He strongly suggested that the City provide comments and make its demands known to NID.

7 ADJOURNMENT

Prior to adjournment, Councilmember Douglass mentioned that the League of Women Voters scheduled a "meet your candidates" event on Wednesday, October 12 beginning at 6:30 PM at the Sierra Vista Community Center. He recommended that everyone attend.

As there was no further business on the agenda, Mayor Parnham adjourned the meeting at 8:54PM.

Prepared by City Attorney Alfred Cabral

STAFF REPORT TO THE COLFAX CITY COUNCIL

FOR THE OCTOBER 26, 2016 COUNCIL MEETING

FROM: John Schempf, City Manager
PREPARED BY: Laurie Van Groningen, Finance Director
DATE: October 19, 2016
SUBJECT: City of Colfax Cash Summary Report: September 2016

X	N/A		FUNDED		UN-FUNDED	AMOUNT:	FROM FUND:

RECOMMENDED ACTION: Accept and file City of Colfax Cash Summary Report: September 2016.

BACKGROUND AND ANALYSIS:

These monthly financial reports include General Fund Reserved Cash Analysis Graphs and the City of Colfax Cash Summary Report (with supporting documentation). The reports are prepared monthly on a cash basis and are reconciled to the General Ledger accounting system, previous reports, and bank statements. Detailed budget comparisons are provided as a mid-year report and also as part of the proposed budget process each year.

The purpose of the reports is to provide status of funds and transparency for Council and the public of the financial transactions of the City.

The attached reports reflect an overview of the financial transactions of the City of Colfax in September 2016. Monthly highlights include:

- Quarterly payment for Sheriff services was paid in September - $156,401.
- Receipts for sales tax were significantly higher for September due to a final allocation/catchup for the end of the State Triple Flip program (ended December 2016) and a final adjustment for the quarter ended June 30 which represented a 7% increase over the previous quarter.
- Negative cash fund balances in Fund 218 - Support Law Enforcement, Fund 250 - Streets& Roads and Fund 370 - Capital Funds are due to timing of funding allocations and reimbursements.
- The annual payment for the State Water Resource Board loan is being paid in October - $438,974.

ATTACHMENTS:

1. General Fund Reserved Cash Analysis Graphs
    a. Cash Analysis – Balance
    b. Expenses by Month
    c. Revenues by Month
2. Cash Activity Reports
    a. Cash Summary
    b. Cash Transaction Report – by individual fund
    c. Check Register Report - Accounts Payable
    d. Daily Cash Summary Report (Cash Receipts)

City of Colfax - September 2016
General Fund Reserved Cash Analysis

(Dollars in Thousands)

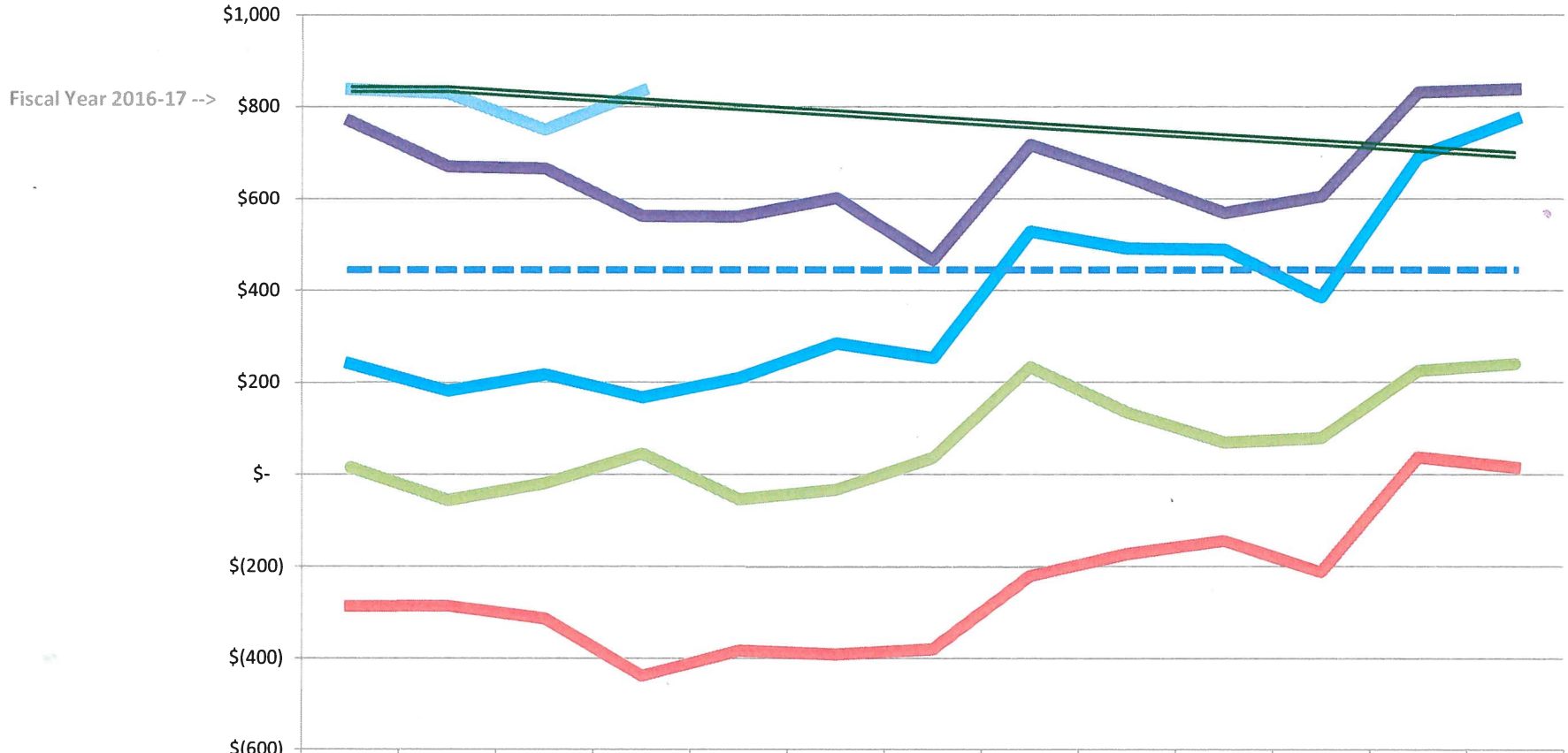

	Prev Yr	Jul	Aug	Sep	Oct	Nov	Dec	Jan	Feb	Mar	Apr	May	Jun
Cash Balance FY2016-17	$838	$829	$750	$835									
Cash Balance FY2015-16	$768	$670	$666	$562	$561	$601	$466	$717	$647	$569	$605	$831	838
Cash Balance FY2014-15	$240	$181	$217	$167	$209	$284	$253	$528	$491	$489	$385	$691	773
Cash Balance FY2013-14	$15	$(57)	$(20)	$45	$(55)	$(34)	$36	$233	$134	$69	$79	$225	240
Cash Balance FY2012-13	$(287)	$(286)	$(314)	$(438)	$(383)	$(391)	$(380)	$(221)	$(173)	$(144)	$(212)	$37	15
*Reserves (Ops, Cap, Pen)	$445	$445	$445	$445	$445	$445	$445	$445	$445	$445	$445	$445	445
Budget FY2016-17	$838	$838	$825	$812	$799	$786	$773	$760	$747	$734	$721	$708	$695

*City Administrative policy stipulates General Fund Reserve of 25% (3 months) of annual General Fund Revenues.

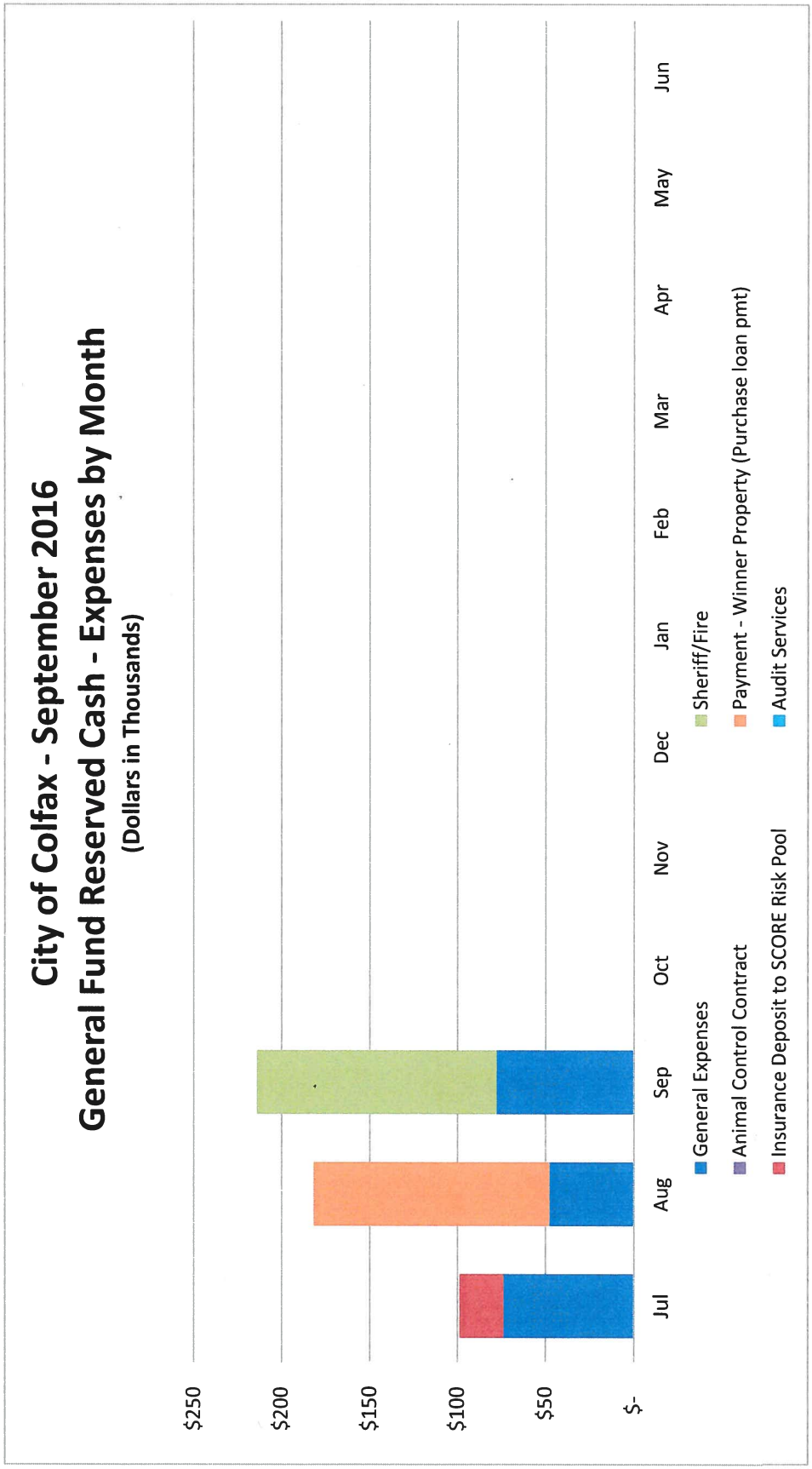
City of Colfax - September 2016
General Fund Reserved Cash - Expenses by Month
(Dollars in Thousands)
$250
$200
$150
$100
$50
$-
Jul
Aug
Sep
Oct
Nov
Dec
Jan
Feb
Mar
Apr
May
Jun
General Expenses
Animal Control Contract
Insurance Deposit to SCORE Risk Pool
Sheriff/Fire
Payment - Winner Property (Purchase loan pmt)
Audit Services

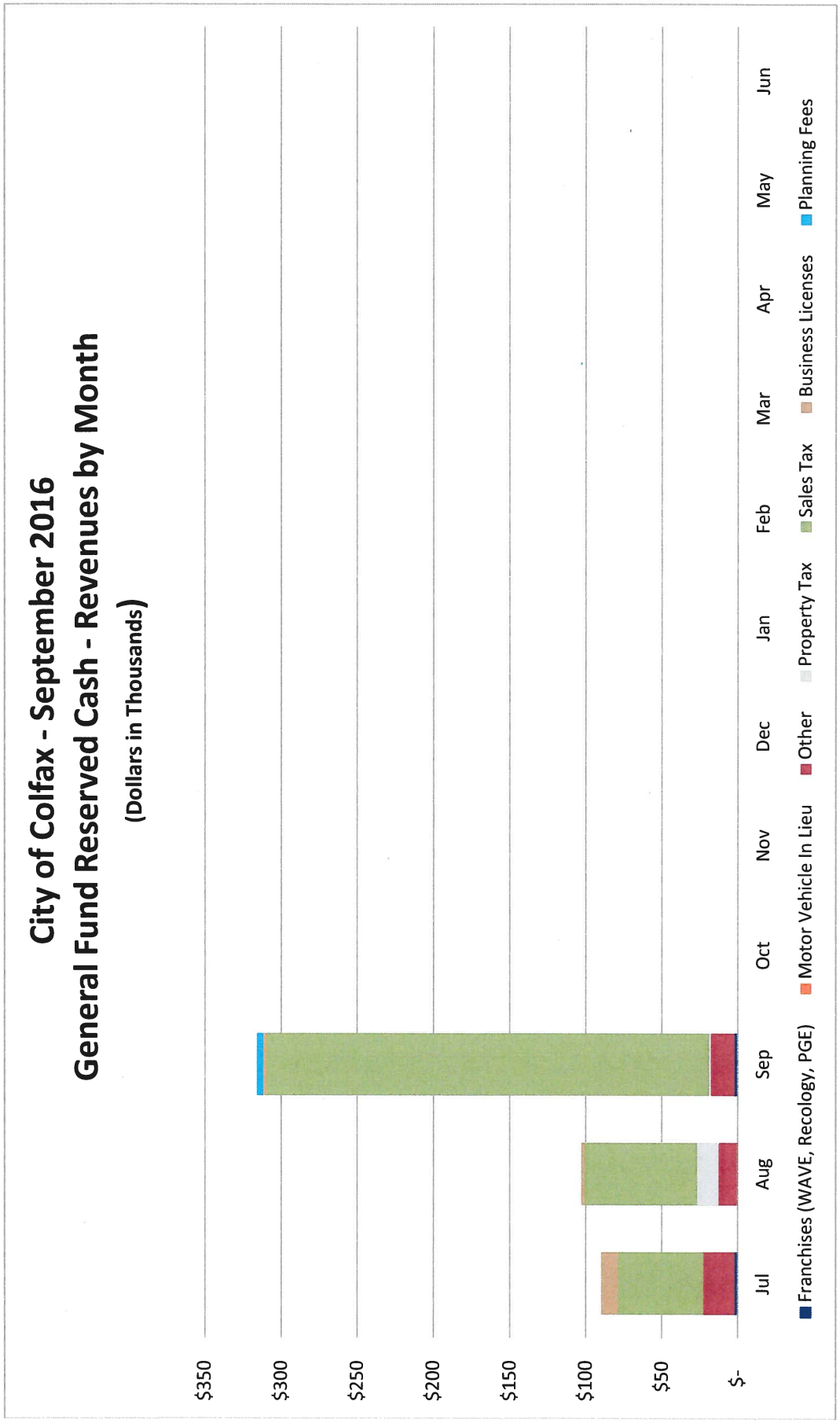
City of Colfax - September 2016
General Fund Reserved Cash - Revenues by Month
(Dollars in Thousands)
$350
$300
$250
$200
$150
$100
$50
$-
Jul
Aug
Sep
Oct
Nov
Dec
Jan
Feb
Mar
Apr
May
Jun
Franchises (WAVE, Recology, PGE)
Motor Vehicle In Lieu
Other
Property Tax
Sales Tax
Business Licenses
Planning Fees

City of Colfax
Cash Summary
September 30, 2016

	Balance 08/31/2016	Revenues In	Expenses Out	Transfers	Balance 09/30/2016
US Bank	$ 352,536.68	$ 487,532.01	$ (427,043.23)	$ -	$ 413,025.46
LAIF	$ 3,576,677.14	$ -		$ -	$ 3,576,677.14
Total Cash - General Ledger	$ 3,929,213.82	$ 487,532.01	$ (427,043.23)	$ -	$ 3,989,702.60
Petty Cash (In Safe)	$ 300.00				$ 300.00
Total Cash	$ 3,929,513.82	$ 487,532.01	$ (427,043.23)	$ -	$ 3,990,002.60

Change in Cash Account Balance - Total **$ 60,488.78**

Attached Reports:

1. Cash Transactions Report (By Individual Fund)
2. Check Register Report (Accounts Payable) $ (355,773.77)
3. Cash Receipts - Daily Cash Summary Report $ 322,421.40

Payroll Checks and Tax Deposits	$ (57,703.76)	
Utility Billings - Receipts	$ 151,544.91	
Bank Service Charge	$ -	
	$ -	
	$ -	
	$ 60,488.78	$ -

Prepared by: Laurie Van Groningen
Laurie Van Groningen, Finance Director

Reviewed by: John Schempf
John Schempf, City Manager

City of Colfax

Cash Transactions Report - September 2016

	Beginning Balance	Debit Revenues	Credit (Expenditures)	Ending Balance
Fund Type: 1.11 - General Fund - Unassigned				
Fund: 100 - General Fund	$ 925,211.00	$ 313,962.33	$ (211,660.00)	$ 1,027,513.33
Fund: 120 - Land Development Fees	$ 25,170.44	$ 1,000.00	$ (2,287.50)	$ 23,882.94
Fund: 570 - Garbage Fund	$ (217,986.20)	$ 1,436.84	$ (263.14)	$ (216,812.50)
Fund Type: 1.11 - General Fund - Unassigned	**$ 732,395.24**	**$ 316,399.17**	**$ (214,210.64)**	**$ 834,583.77**
Fund Type: 1.14 - General Fund - Restricted				
Fund: 571 - AB939 Landfill Diversion	$ 30,517.26	$ -	$ -	$ 30,517.26
Fund: 572 - Landfill Post Closure Maintenance	$ 776,839.96	$ -	$ (7,345.87)	$ 769,494.09
Fund Type: 1.14 - General Fund - Restricted	**$ 807,357.22**	**$ -**	**$ (7,345.87)**	**$ 800,011.35**
Fund Type: 1.24 - Special Rev Funds - Restricted				
Fund: 210 - Mitigation Fees - Roads	$ 52,793.59	$ -	$ (3,755.00)	$ 49,038.59
Fund: 211 - Mitigation Fees - Drainage	$ 3,049.66	$ -	$ -	$ 3,049.66
Fund: 212 - Mitigation Fees - Trails	$ 42,724.88	$ -	$ -	$ 42,724.88
Fund: 213 - Mitigation Fees - Parks/Rec	$ 97,841.35	$ -	$ -	$ 97,841.35
Fund: 214 - Mitigation Fees - City Bldgs	$ 944.60	$ -	$ -	$ 944.60
Fund: 215 - Mitigation Fees - Vehicles	$ 4,493.65	$ -	$ -	$ 4,493.65
Fund: 217 - Mitigation Fees - DT Parking	$ 26,631.18	$ -	$ -	$ 26,631.18
Fund: 218 - Support Law Enforcement	$ -	$ -	$ (25,000.00)	$ (25,000.00)
Fund: 241 - CDBG Housing Rehabiliation	$ 94,295.50	$ -	$ -	$ 94,295.50
Fund: 244 - CDBG MicroEnterprise Lending	$ 113,850.91	$ 2,000.00	$ -	$ 115,850.91
Fund: 250 - Streets - Roads/Transportation	$ (23,696.53)	$ -	$ (14,181.36)	$ (37,877.89)
Fund: 253 - Gas Taxes	$ 11,686.54	$ 3,777.40	$ (1,496.61)	$ 13,967.33
Fund: 270 - Beverage Container Recycling	$ 32,939.31	$ -	$ -	$ 32,939.31
Fund: 280 - Oil Recycling	$ 6,247.49	$ -	$ (5,282.77)	$ 964.72
Fund: 286 - Community Projects	$ 5,266.76	$ -	$ -	$ 5,266.76
Fund: 292 - Fire Department Capital Funds	$ 140,146.68	$ -	$ -	$ 140,146.68
Fund: 342 - Fire Construction - Mitigation	$ 2,429.12	$ -	$ -	$ 2,429.12
Fund: 343 - Recreation Construction	$ 2,429.57	$ -	$ -	$ 2,429.57
Fund Type: 1.24 - Special Rev Funds - Restric	**$ 614,074.26**	**$ 5,777.40**	**$ (49,715.74)**	**$ 570,135.92**
Fund Type: 1.34 - Capital Projects - Restricted				
Fund: 350 - Street Improvement Projects	$ 24,035.55	$ -	$ -	$ 24,035.55
Fund: 370 - North Main Street Bike Route	$ (29,505.51)	$ -	$ (1,738.50)	$ (31,244.01)
Fund Type: 1.34 - Capital Projects - Restricted	**$ (5,469.96)**	**$ -**	**$ (1,738.50)**	**$ (7,208.46)**
Fund Type: 2.11 - Enterprise Funds - Unassigned				
Fund: 560 - Sewer	$ 516,388.74	$ 100,904.40	$ (137,913.30)	$ 479,379.84
Fund: 561 - Sewer Liftstations	$ 358,146.24	$ 17,842.02	$ (13,523.04)	$ 362,465.22
Fund: 563 - Wastewater Treatment Plant	$ 502,730.26	$ 45,673.38	$ (2,546.54)	$ 545,857.10
Fund: 564 - Sewer Connections	$ 41,080.00	$ -	$ -	$ 41,080.00
Fund: 565 - General Obligation Bond 1978	$ 2,064.92	$ 0.68	$ -	$ 2,065.60
Fund: 567 - Inflow & Infiltration	$ 360,746.90	$ 934.96	$ (49.60)	$ 361,632.26
Fund Type: 2.11 - Enterprise Funds - Unassigı	**$ 1,781,157.06**	**$ 165,355.44**	**$ (154,032.48)**	**$ 1,792,480.02**
Fund Type: 9.0 - CLEARING ACCOUNT				
Fund: 998 - PAYROLL CLEARING FUND	$ -	$ -	$ -	$ -
Fund Type: 9.0 - CLEARING ACCOUNT	**$ -**	**$ -**	**$ -**	**$ -**
Grand Totals:	**$ 3,929,513.82**	**$ 487,532.01**	**$ (427,043.23)**	**$ 3,990,002.60**

Check Register Report

September 2016

Date: 10/19/2016
Time: 3:00 pm
Page: 1

CITY OF COLFAX

BANK: US BANK

Check Number	Check Date	Status	Void/Stop Date	Vendor Number	Vendor Name	Check Description	Amount
US BANK Checks							
51982	09/01/2016	Reconciled		01418	ALL PHASE AUTO	2001 CHEVOLET COOLER HOSE &	1,293.12
51983	09/01/2016	Reconciled		01448	AMERIGAS - COLFAX	PROPANE SHERIFF'S DEPARTMENT	14.95
51984	09/01/2016	Reconciled		01448	AMERIGAS - COLFAX	PROPANE FIRE HOUSE	17.77
51985	09/01/2016	Reconciled		02829	BLUE RIBBON PERSONNEL SERVICES	ACT & LABOR TEMPS	1,452.80
51986	09/01/2016	Reconciled		03562	COMMERCIAL PUMP SERVICE, INC	UPGRADE WWTP PIPING	13,108.48
51987	09/01/2016	Reconciled		04163	DALE'S CANVAS	BACKFLOW PREVENTORS BAGS	389.15
51988	09/01/2016	Reconciled		04165	DANCKERT COMMUNICATION CO.	CITY HALL PHONE SYSTEM	7,613.98
51989	09/01/2016	Reconciled		04250	DEPARTMENT OF CONSERVATION	FEE REPORT 04/01 - 6/30/2016	1.31
51990	09/01/2016	Reconciled		05221	EOSI - ENVIRONMENT OPERATING	WWTP CHEMICALS	5,199.00
51991	09/01/2016	Reconciled		05499	EXPRESS SEWER & MAIN, INC.	REIMBURSE BLDG PERMIT FEE	75.95
51992	09/01/2016	Reconciled		07460	GOLD COUNTRY MEDIA	LEGAL NOTICE SOLICITING	100.00
51993	09/01/2016	Reconciled		08050	HACH COMPANY	WWTP SUPPLIES	479.76
51994	09/01/2016	Reconciled		08159	HILL BROTHERS CHEMICAL CO.	CHEMICALS	7,263.67
51995	09/01/2016	Reconciled		09540	INTERSTATE SALES	POT HOLE PATCH 50#	1,908.23
51996	09/01/2016	Reconciled		12180	LAWRENCE & ASSOCIATES INC	JULY 2016 LAND FILL MONITORING	3,051.96
51997	09/01/2016	Reconciled		12200	LEAGUE OF CALIFORNIA CITIES	DIVISION MEETING	14.00
51998	09/01/2016	Reconciled		14356	NORTHERN CALIFORNIA GLOVE	GLOVES	156.90
51999	09/01/2016	Reconciled		16035	PG&E	STMT 8/23/2016	24,786.13
52000	09/01/2016	Reconciled		16200	PLACER COUNTY SHERIFF DEPT.	FY2016-17 SERVICES Q1	156,401.25
52001	09/01/2016	Reconciled		16040	PURCHASE POWER	POSTAGE	606.11
52002	09/01/2016	Reconciled		01790	SIERRA OFFICE PRODUCTS	SUPPLIES	210.58
52003	09/01/2016	Reconciled		16600	STATIONARY ENGINEERS, LOCAL 39	EMPLOYERS REPORT	9,780.00
52004	09/07/2016	Reconciled		01418	ALL PHASE AUTO	CHEVY SILVERABO	83.01
52005	09/07/2016	Reconciled		01448	AMERIGAS - COLFAX	DEPOT PROPANE TANK RENTAL	106.43
52006	09/07/2016	Reconciled		01448	AMERIGAS - COLFAX	PROPANE CORP YARD	52.92
52007	09/07/2016	Reconciled		01460	AMERIPRIDE UNIFORM SERVICE	UNIFORMS & CLEANING SUPPLIES	735.85
52008	09/07/2016	Reconciled		06450	KURTIS H. FOX, M.D.	STAFF IMMUNIZATIONS/VACCINES	184.00
52009	09/07/2016	Reconciled		07225	GEO PLASTICS (CA)	DUAL OIL FILTER	4,975.00
52010	09/07/2016	Reconciled		08170	HILLS FLAT LUMBER CO	STMT 8/25/2016	522.31
52011	09/07/2016	Reconciled		08660	HUNT AND SONS, INC.	PUBLIC WORKS FUEL	242.89
52012	09/07/2016	Reconciled		12235	LIVELY LOCKS AND DEAD BOLTS	25 KEYS & SERVICE CALL	345.63
52013	09/07/2016	Reconciled		13193	MARK THOMAS & COMPANY	S. AUBURN ROUNDABOUT	3,755.00
52014	09/07/2016	Reconciled		16300	PCWA -PLACER COUNTY	WATER	4,326.19
52015	09/07/2016	Reconciled		16011(2)	PELLETREAU, ANDERSON & CABRAL	AUGUST 2016 SERVICES	7,290.00
52016	09/07/2016	Reconciled		16040A	PITNEY BOWES	SEPT 30 - DEC 30,2016	180.31
52017	09/07/2016	Reconciled		03580	PLACER COUNTY HHS	ANIMAL & FIELD SERVICES	7,497.75
52018	09/07/2016	Reconciled		18400	RIEBES AUTO PARTS	SUPPLIES	121.97
52019	09/07/2016	Reconciled		19396	SIERRA SAFETY COMPANY	"DOUBLE ARROW" STREET SIGN	41.39
52020	09/07/2016	Reconciled		19791	SUTTER MEDICAL FOUNDATION	STAFF MEDICAL CHECK	407.00
52021	09/07/2016	Reconciled		21560	US BANK CORPORATE PMT SYSTEM	CREDIT CARD PURCHASES	3,599.68
52022	09/07/2016	Reconciled		22106	VAN GRONINGEN & ASSOCIATES	FINANCIAL CONSULTANT	6,093.75
52023	09/14/2016	Reconciled		01414	ALHAMBRA & SIERRA SPRINGS	WATER CITY HALL/CORP	179.51
52024	09/14/2016	Reconciled		01418	ALL PHASE AUTO	CHEVY DUMP TRUCK	401.73
52025	09/14/2016	Reconciled		01766	AT&T MOBILITY	SEPT 2016 CELL PHONES	840.76
52026	09/14/2016	Reconciled		02829	BLUE RIBBON PERSONNEL SERVICES	ACT & LABOR TEMPS	2,677.52
52027	09/14/2016	Reconciled		02901	BUREAU VERITAS NORTH AMERICA	BLDG. OFFICIAL SERVICES	6,120.00

Check Register Report

September 2016

Date: 10/19/2016
Time: 3:00 pm
Page: 2

CITY OF COLFAX

BANK: US BANK

Check Number	Check Date	Status	Void/Stop Date	Vendor Number	Vendor Name	Check Description	Amount
US BANK Checks							
52028	09/14/2016	Printed		03173	LORRAINE CASSIDY	REFRESHMENTS FOR TRAINING	43.86
52029	09/14/2016	Reconciled		04165	DANCKERT COMMUNICATION CO.	CITY HALL WIRING PROJECT	353.00
52030	09/14/2016	Reconciled		06424(2)	FLO-LINE TECHNOLOGY, INC	REPLACEMENT PUMPS FOR	14,849.74
52031	09/14/2016	Reconciled		07460	GOLD COUNTRY MEDIA	PUBLIC HEARING NOTICE	434.40
52032	09/14/2016	Reconciled		07465	GOLD MINER PEST CONTROL	WWTP PEST CONTROL SERVICES	210.00
52033	09/14/2016	Reconciled		09540	INTERSTATE SALES	SIGN POST 12'	564.38
52034	09/14/2016	Reconciled		16140	PLACER COUNTY AIR POLLUTION	PER CAPITA ASSESSMENT	1,034.00
52035	09/14/2016	Reconciled		18194	RGS - REGIONAL GOV SERVICES	AUG 2016 PLANNING SERVICES	3,420.00
52036	09/14/2016	Reconciled		19591	STANLEY CONVERGENT SECURITY	DEPOT SECURITY 10/1/16 - 12/31	132.57
52037	09/14/2016	Printed		23169	WAVE BUSINESS SOLUTIONS	CORP YARD PHONE/INTERNET	54.90
52038	09/14/2016	Reconciled		23301	WESTERN PLACER WASTE	AUG 2016 SLUDGE REMOVAL	681.45
52039	09/21/2016	Reconciled		02630	BENNETT ENGINEERING SERVICES	N. MAIN ST. BIKE ROUTE	1,738.50
52040	09/21/2016	Reconciled		02829	BLUE RIBBON PERSONNEL SERVICES	ACT & LABOR TEMPS	1,282.00
52041	09/21/2016	Reconciled		04234	DE LAGE LANDEN FINANCIAL	SEPT 2016 COPY MACHINE	469.43
52042	09/21/2016	Reconciled		04400	DIAMOND WELL DRILLING CO.	JULY 2016 MONITORING	2,992.00
52043	09/21/2016	Printed		04299	DKF SOLUTIONS GROUP	SWRCB/SSMP TRAINING	2,200.00
52044	09/21/2016	Reconciled		04592	DWAYNE ARMSTRONG COMMUNICATION	WWTP INTERNET 9/15/2016	99.95
52045	09/21/2016	Reconciled		07146	GDX	OLD CHLORINE BLDG	1,400.00
52046	09/21/2016	Reconciled		08660	HUNT AND SONS, INC.	PUBLIC WORKS FUEL	223.89
52047	09/21/2016	Reconciled		14356	NORTHERN CALIFORNIA GLOVE	AEP-D EARPLUG DISPENSER	204.26
52048	09/21/2016	Reconciled		16040A	PITNEY BOWES	E-Z SEAL FOR	16.44
52049	09/21/2016	Reconciled		19059	SCHEMPF, JOHN	MILEAGE REIMBURSEMENT 8/9/16	30.24
52050	09/21/2016	Reconciled		01790	SIERRA OFFICE PRODUCTS	AUG 2016 OFFICE SUPPLIES	580.56
52051	09/21/2016	Reconciled		19694	STATE WATER POLLUTION CLEANUP	ACL COMPLAINT R5-2016-0562	21,000.00
52052	09/21/2016	Reconciled		23169	WAVE BUSINESS SOLUTIONS	RAILROAD DEPOT SECURITY PHONE	103.70
52053	09/29/2016	Printed		02829	BLUE RIBBON PERSONNEL SERVICES	ACT TEMP	598.80
52054	09/29/2016	Printed		06278	FRONTIER COMMUNICATIONS	WWTP PHONE SERVICE	175.88
52055	09/29/2016	Printed		07465	GOLD MINER PEST CONTROL	PEST CONTROL FIRE DEPT #37	144.00
52056	09/29/2016	Printed		08050	HACH COMPANY	WWTP LAB TEST REAGENTS	640.82
52057	09/29/2016	Printed		08086	HBE RENTALS	LAWN AERATOR	65.00
52058	09/29/2016	Reconciled		08170	HILLS FLAT LUMBER CO	SUPPLIES	551.17
52059	09/29/2016	Printed		09455	INLAND BUSINESS SYSTEMS	COPY MACH MAINTENANCE	468.44
52060	09/29/2016	Printed		16300	PCWA -PLACER COUNTY	WATER MAIN REPAIR	369.53
52061	09/29/2016	Printed		16727	PONTICELLO ENTERPRISES	STMT 9/19/16	2,550.00
52062	09/29/2016	Printed		19320	SOLENIS	BELT PRESS POLYMER	1,577.03
52063	09/29/2016	Printed		16600	STATIONARY ENGINEERS, LOCAL 39	EMPLOYERS REPORT	9,780.00
52064	09/29/2016	Printed		23169	WAVE BUSINESS SOLUTIONS	FIRE STATION PHONE	28.13

Total Checks: 83 **Checks Total (excluding void checks): 355,773.77**

Total Payments: 83 **Bank Total (excluding void checks): 355,773.77**

Total Payments: 83 **Grand Total (excluding void checks): 355,773.77**

DAILY CASH SUMMARY REPORT

09/01/2016 - 09/30/2016

City of Colfax

			Debit	Credit	Net Chng
Fund: 100 - General Fund					
09/02/2016	Daily Totals		918.42	0.00	918.42
09/09/2016	Daily Totals		4,853.64	0.00	4,853.64
09/10/2016	Daily Totals		11.00	0.00	11.00
09/14/2016	Daily Totals		5,605.57	0.00	5,605.57
09/15/2016	Daily Totals		0.00	167.34	-167.34
09/16/2016	Daily Totals		2,042.86	0.00	2,042.86
09/23/2016	Daily Totals		124,941.09	0.00	124,941.09
09/24/2016	Daily Totals		171,923.39	0.00	171,923.39
09/30/2016	Daily Totals		3,666.36	0.00	3,666.36
Fund: 100 - General Fund		**TOTALS:**	**313,962.33**	**167.34**	**313,794.99**
Fund: 120 - Land Development Fees					
09/02/2016	Daily Totals		1,000.00	0.00	1,000.00
Fund: 120 - Land Development Fees		**TOTALS:**	**1,000.00**	**0.00**	**1,000.00**
Fund: 244 - CDBG MicroEnterprise Lending					
09/02/2016	Daily Totals		1,000.00	0.00	1,000.00
09/30/2016	Daily Totals		1,000.00	0.00	1,000.00
Fund: 244 - CDBG MicroEnterprise Lending		**TOTALS:**	**2,000.00**	**0.00**	**2,000.00**
Fund: 253 - Gas Taxes					
09/30/2016	Daily Totals		3,777.40	0.00	3,777.40
Fund: 253 - Gas Taxes		**TOTALS:**	**3,777.40**	**0.00**	**3,777.40**
Fund: 560 - Sewer					
09/14/2016	Daily Totals		61.33	0.00	61.33
09/30/2016	Daily Totals		200.00	0.00	200.00
Fund: 560 - Sewer		**TOTALS:**	**261.33**	**0.00**	**261.33**
Fund: 561 - Sewer Liftstations					
09/02/2016	Daily Totals		407.00	0.00	407.00
09/16/2016	Daily Totals		407.00	0.00	407.00

DAILY CASH SUMMARY REPORT

09/01/2016 - 09/30/2016

10/19/2016
2:58 pm

City of Colfax

			Debit	Credit	Net Chng
09/23/2016	Daily Totals		407.00	0.00	407.00
09/30/2016	Daily Totals		366.00	0.00	366.00
Fund: 561 - Sewer Liftstations		**TOTALS:**	**1,587.00**	**0.00**	**1,587.00**
Fund: 565 - General Obligation Bond 1978					
09/19/2016	Daily Totals		0.68	0.00	0.68
Fund: 565 - General Obligation Bond 1978		**TOTALS:**	**0.68**	**0.00**	**0.68**
		GRAND TOTALS:	**322,588.74**	**167.34**	**322,421.40**

STAFF REPORT TO THE COLFAX CITY COUNCIL

FOR THE OCTOBER 26, 2016 COUNCIL MEETING

FROM: John Schempf, City Manager
PREPARED BY: Staff
DATE: October 20, 2016
SUBJECT: Proposal from Mink Creek HOA

X	N/A		FUNDED		UN-FUNDED	AMOUNT:	FROM FUND:

RECOMMENDED ACTION: Accept proposal from Mink Creek HOA for discussion in Closed Session at the November 9, 2016 Regular Meeting of the City Council of the City of Colfax.

BACKGROUND AND ANALYSIS:

The City received a request from the president of the Mink Creek Homeowners Association to consider an offer to "mitigate the issues between the City of Colfax and the Mink Creek HOA". As this is a sensitive issue and the HOA has previously threatened litigation, staff is recommending Council discuss the proposal in closed session at the next meeting.

ATTACHMENTS:

a. Memo from the Mink Creek Homeowners Association

Requesting an agenda Item

The Mink Creek Home Owners Assoc. Requests that the Colfax City Council consider an offer to mitigate the issues between the City of Colfax and the Mink Creek HOA.

A proposal offered by the Mink Creek HOA to the City of Colfax for their consideration is as follows:

"If" The City of Colfax will acknowledge ownership of the Sewer and Storm drain systems within the Mink Creek sub-division, and make a Token Payment toward the repair of the storm drain system which has cost the HOA $225,000. For a long term solution to the system.

The Mink Creek Home Owners Assoc. with the approval of the residence of the Sub-division. Will sign a Hold Harmless Agreement for "ALL" Errors and Omission that might have occurred during the construction of the sub-division. We believe this to be a fair and equitable solution to the issues at hand.

On behalf of the Mink Creek Home Owners Assoc.

Signed: Alexander K. Turner Jr.

STAFF REPORT TO THE COLFAX CITY COUNCIL

FOR THE OCTOBER 26, 2016 COUNCIL MEETING

FROM: Ty LaBelle, Colfax Fire Chief
DATE: October 12, 2016
SUBJECT: **Volunteer Fire Department Emergency Response Vehicle (Squad 36) Replacement**

☐ **N/A** ☐ **FUNDED** ☐ **UN-FUNDED** **AMOUNT: $174,286.00** **FROM FUND: 292**

RECOMMENDED ACTION: Adopt Resolution 44-2016 authorizing the City Manager to enter into a lease/purchase agreement with Burton-Rosenbauer Fire Equipment for an emergency response vehicle (Squad 36).

BACKGROUND AND DISCUSSION

In September 2015 the Colfax City Council authorized the fire department to proceed with the bidding process to purchase a new emergency response vehicle (Rescue) that would meet the needs of the City of Colfax Fire Department. The new Rescue would replace the 1990 Ford F350 (Squad 36) that is becoming more difficult to maintain and is past its 20 year life expectancy. The new Rescue would also allow more of the volunteers to respond for the City of Colfax. Currently the department has only 2 Qualified Class B operators for the fire engines, and the Rescue only requires a Class C driver's license.

The Department received four bids with comparable price schedules, all within a $1000 range. One bid was eliminated due to non-compliance with bid specifications. Bids from Burton/ Rosenbauer, Boise Equipment, and Danko were evaluated according to the following criteria: customer service, warranty; build up design, compartment capacity for equipment, location of manufacture, and cab and chassis durability. The proposal from Burton/Rosenbauer for a Dodge 5500 Cab and Chassis with a build-up was deemed superior. A copy of the proposal can be obtained at the City Clerk's office.

FINANCIAL IMPLICATIONS

The purchase price of new Rescue is $174,286. The FY2016-2017 approved budget includes $56,000 which could be used for the down payment and annual lease for the new vehicle. The FY2017-2018 approved budget allows the department to pay $36,000 towards the balance. The outstanding balance of $82,286 will be paid over a 10 year period. The 10 year Lease/Purchase annual payment of $10,420 draws from the Fire Capital Fund 292. Fire Department annual revenues range from $12,000 to $25,000 for the Fire Capital Fund 292. There are no penalties for early retirement of the lease agreement.

Attachments:
1. Resolution 44-2016
2. Burton Squad Image
3. Burton/ Rosenbauer 10 year Lease Quote

City of Colfax
City Council

Resolution № 44-2016

AUTHORIZING THE CITY MANAGER TO ENTER INTO A LEASE/PURCHASE AGREEMENT WITH BURTON-ROSENBAUER FIRE EQUIPMENT FOR AN EMERGENCY RESPONSE VEHICLE (SQUAD 36)

WHEREAS, the Colfax Fire Department Emergency Response Vehicle (Squad 36) is past its 20 year life expectancy, is difficult to maintain and limits the number of volunteers who can use the vehicle; and,

WHEREAS, in September 2015 the City Council of the City of Colfax authorized the Colfax Fire Department solicit bid proposals to purchase a new vehicle that would meet the needs of the City of Colfax Fire Department; and,

WHEREAS, the Fire Department received four bids with comparable price schedules; and,

WHEREAS, the proposal from Burton/Rosenbauer for a Dodge 5500 Cab and Chassis with a build-up was deemed the best fit for the Colfax Fire Department; and,

WHEREAS, the terms of a lease/purchase agreement are acceptable to the City.

NOW THEREFORE, BE IT RESOLVED by the City Council of the City of Colfax authorizing the City Manager to enter into a Lease/Purchase Agreement with Burton-Rosenbauer Fire Equipment to purchase an emergency response vehicle.

THE FOREGOING RESOLUTION WAS DULY AND REGULARLY ADOPTED at a regular meeting of the City Council of the City of Colfax held on the 26th day of October, 2016 by the following vote of the Council:

AYES:
NOES:
ABSTAIN:
ABSENT:

_____
Tom Parnham, Mayor

ATTEST:

_____
Lorraine Cassidy, City Clerk

NOTES:
1. OVERALL HEIGHT IS IN LOADED CONDITION. UNLOADED HEIGHTS MAY BE 4" ABOVE HEIGHTS SHOWN.
2. DO NOT SCALE DRAWING.
3. ALL DIMENSIONS ARE APPROXIMATE AND SUBJECT TO ENGINEERING CHANGES.
4. DRAWING MAY OR MAY NOT SHOW ALL ITEMS AS DESCRIBED IN THE WRITTEN DETAIL SPECIFICATIONS.
5. INCLUSION OF AN ITEM ON THE DRAWING DOES NOT CONSTITUTE INCLUSION OF THAT ITEM WITH THE FINAL DELIVERED UNIT.

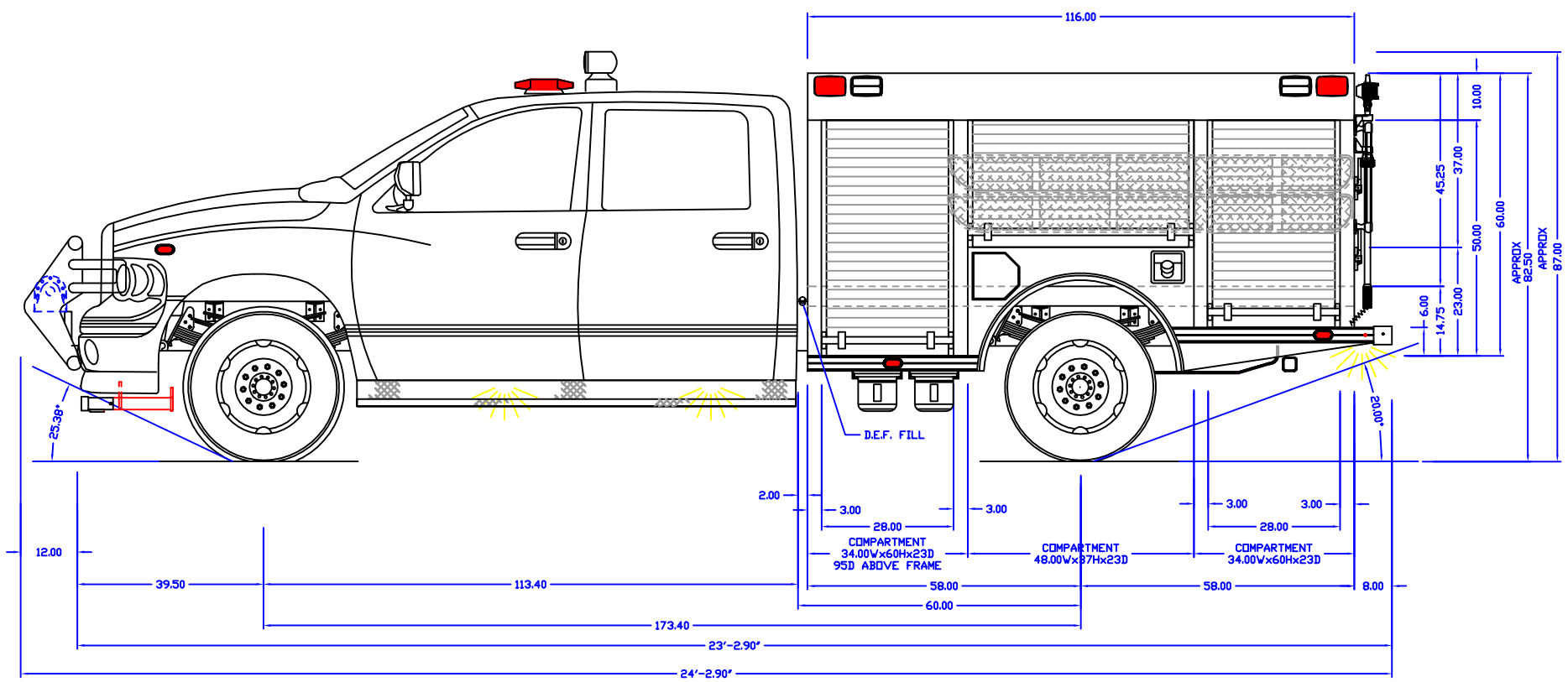

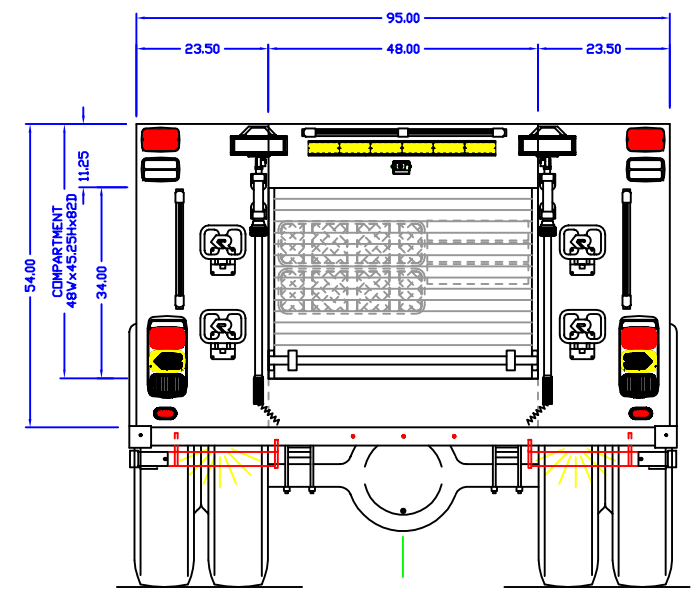

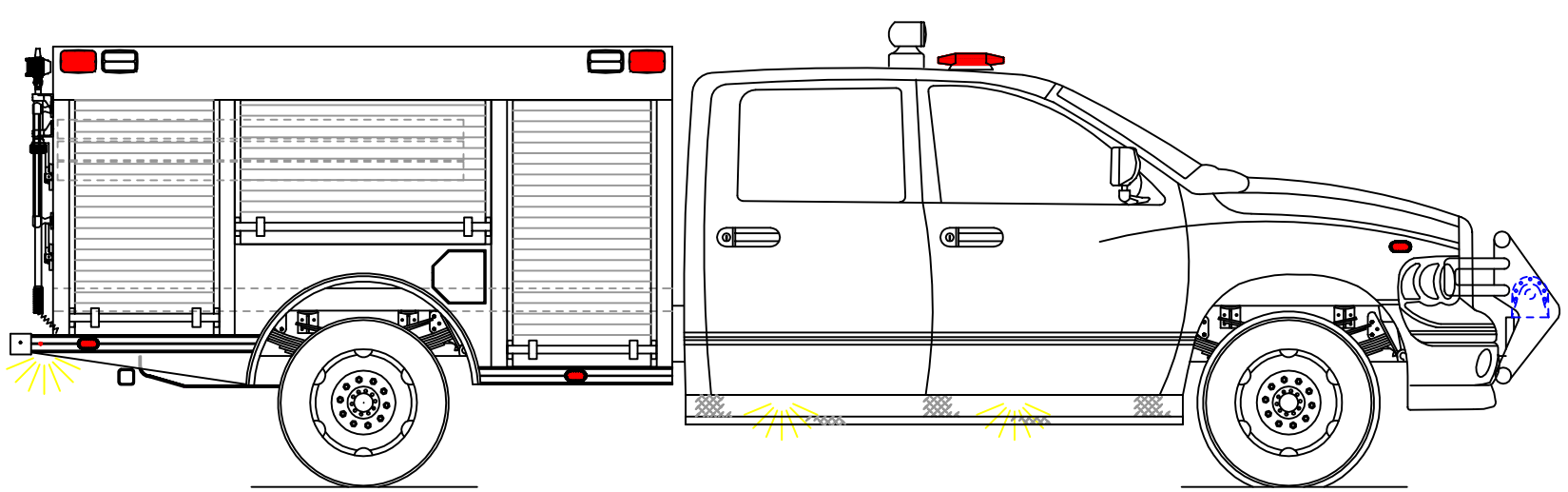

APPROVED BY:	
CHASSIS: DODGE	
PUMP: NA	
TANK: NA	
PANEL MATL: NA	
COMP INTERIOR: SPRAY LINED	
MAXIMUM HEIGHT	7' 3"
MAXIMUM LENGTH	24' 5"
BODY WIDTH	95"

REVISED: BVZ	DATE: 4/19/16
DRAWN: BVZ	DATE: 4/2/15

PROPRIETARY AND CONFIDENTIAL
THE INFORMATION CONTAINED IN THIS DRAWING IS THE SOLE PROPERTY OF ROSEBAUER. ANY REPRODUCTION IN PART OR AS A WHOLE WITHOUT THE WRITTEN PERMISSION OF ROSENBAUER IS PROHIBITED.

COLFAX CITY, CA

rosenbauer

MINI RESCUE 1/8"

DRAWING NUMBER: COLFAX CITY, CA

REV: 0

rosenbauer

May 10, 2016

Colfax FD
33 Church Street
P.O. Box 1233
Colfax, CA 95713

Attention: Captain Lomen;

Thank you for the opportunity to propose the following Rosenbauer custom fire apparatus:

One (1)Mini Rescue
on a 2017 Dodge 500 4x4 Chassis

Body Price	**$ 104,853.00**
Chassis Price	**$ 53,764.00**
Delivery (Non taxable)	**$ 3,773.00**
CA State Sales tax (8.75%)	**$ 11,896.00**
	$ 174,286.00

Included in above price: Delivery, 295 days after receipt of order
Pre-Con to be at Fire Department
Final Delivery (2) People from Colfax FD
Delivery, FD Headquarters

Proposals are requested to remain valid for ninety-(90) days.

One day have class room and hands on training will be provided. A thumb will be provided with the class room training.

Terms - payment due upon acceptance, net 15 days.
If chassis paid for within 15 days after arrival at plant, please **deduct $2,068.00**

Pricing as quoted above is valid for 30 days.

Thank you again for this opportunity to work with the Colfax Fire Department, if you have any questions regarding the above proposal, please contact me at (209) 765-6971 or at john@burtonsfire.com

Sincerely,

John Burton

John Burton
Burton's Fire, Inc.

South Dakota Division
100 Third Street
Lyons, SD 57041
605-543-5591
605-543-9701 Fax
E-mail: sales@
rosenbaueramerica.com

Minnesota Division
5181 260th Street
P.O. Box 549
Wyoming, MN 55092
651-462-1000
651-462-1700 Fax
E-mail: sales@
rosenbaueramerica.com

Aerial Division
870 South Broad Street
Fremont, NE 68025
402-721-7622
402-721-7622 Fax
E-mail: sales@
rosenbaueramerica.com

www.rosenbaueramerica.com

REPUBLIC FIRST NATIONAL

2525 West State Road 114
Rochester, IN 46975
(800) 700-7878
Fax: (800) 865-8517

www.republicfirstnational.com

May 10, 2016

To:	Stephanie Ringeisen
Vendor:	Burton's Fire
From:	Mackie Ozment
Customer:	City of Colfax Fire Department

Thanks for the opportunity to give you a quote on your latest project!

Equipment:	One (1) Rosenbauer Mini Rescue
Unit Cost:	$174,286.00
Down Payment:	$87,143.00
Net Financed:	$87,143.00
Frequency of Payments:	Annual

Term:	7	10
Payments:	$14,159.48	$10,420.14
Factor:	.16251	.11961
APR:	3.33%	3.39%

Delivery Date:	To be determined
First Lease Payment Due:	May, 2017

The lease is to be executed within 14 days of the equipment purchase contract. The quote is subject to acceptance of our documentation and credit approval. Payments and rates reflect pre-application of escrow earnings and manufacturer discounts (if any); and are based upon vendor payments being made no earlier than above dates. Rates are subject to change with Treasury Bills of like-maturity prior to funding. The lease must qualify for Federal Income Tax Exempt status for the Lessor.

Sincerely,
Republic First National Corporation

Mackie Ozment
mackie@rfnonline.com

STAFF REPORT TO THE COLFAX CITY COUNCIL

FOR THE OCTOBER 12, 2016 COUNCIL MEETING

PREPARED BY Travis Berry, Technical Services Manager
FROM: John Schempf, City Manager
DATE: September 27, 2016
SUBJECT: **Sewer Inspection Camera and Locator System Purchase**

	N/A	X	**FUNDED**		**UN-FUNDED**	**AMOUNT: $10,256.08**	**FROM FUND: 561-7300**

RECOMMENDED ACTION: Authorize the City Manager to enter into a purchase agreement with Ferguson Enterprises, Inc. for a sewer inspection camera and locator system.

BACKGROUND AND DISCUSSION

The City is required to visually inspect one hundred percent of its sewer mains and manholes every ten years. This requirement is based on the City of Colfax Sewer System Management Plan that is required by the State Water Resources Control Board Order № 2006-0003-DWQ framework. The City is currently in compliance with this requirement due to recent contracted sewer projects occurring in 2008, 2010, 2011, 2012, and 2013. Those projects consisted of sewer main inspection and rehabilitation due to inflow and infiltration (I&I). Now that all of the City's sewer mains have been repaired, the City needs to initiate an inspection program to maintain compliance with its inspection requirements.

While the Public Works Department currently cleans the sewer collection system with a pressure washing system (jetter), cleaning does not qualify as visual inspection. The City currently contracts with several agencies to perform camera inspection services when blockages occur. A typical contractor's rate structure consists of a $200 site visit plus $100 per manhole entry. Many manholes are spaced farther apart than the inspection cameras can reach, so to inspect one sewer main typically costs $400. If the cost of the camera inspection system I am proposing was spent on hiring a contractor to accomplish the inspection requirements, only approximately ten percent of the collection system would be inspected. Simply put, hiring a contractor to fulfill the City's inspection requirements is an expensive solution for maintaining compliance.

The City needs to purchase its own sewer inspection camera system and locator. It will allow the City to initiate an inspection program and it's also a very useful tool to have at arm's-reach when a problem occurs. It could also be used to inspect a variety of other pipes and voids.

$12,000 has been budgeted for this inspection system in the 2016-2017 FY Budget. Staff has solicited for quotes for the desired system and the lowest bidder is Ferguson Enterprises, Inc. of Auburn in the amount of $10,256.08.

Attachments:

1. Rigid SeeSnake MAX 200B Camera System Brochure
2. NaviTrack II Sonde Locator Brochure
3. Rigid SeeSnake MAX 200B with D2B Drum, NaviTrack II Locator, and Accessories Quote

RIDGID SeeSnake® MAX™ rM200 Series

The rM200 Camera System combines portability with the versatility of the D2 drum series, offering different combinations of push cable stiffness and spring flexibility to tackle any inspection job.

Interchangeability
- The D2 drum series currently consists of the D2A and D2B drums
- The rM200 comes with your choice of drum
  – Either drum can be purchased separately
  – Own them both; quickly and easily interchanged giving you on-the-job flexibility

Pushability
- Drums feature different push cable lengths, diameters, stiffness and springs
- Chose the drum that enables you to easily negotiate turns and tees – there's a drum that's right for you!

Portability
- Easy to transport; via its wheels or carry handle
- Dock the CS6 or CS65 digital monitor for convenient transport, operation and storage

rM200A Reel
Catalog No. 42348

rM200B Reel
Catalog No. 47528

SPECIFICATIONS

	rM200A	rM200B
• System Weight	36.4 lb (16.5 kg)	39.2 lb (17.8 kg)
• Drum Weight	16.3 lb (7.4kg)	19.2 lb (8.7kg)
• Drum Diameter	17" (43.2 cm)	17" (43.2 cm)
• Camera		
View	Self-leveling	Self-leveling
Length	1" (2.6 cm)	1" (2.6 cm)
Diameter	1" (2.5 cm)	1" (2.5 cm)
Light	6 LEDs	6 LEDs
• Sonde		
Frequency	512 Hz	512 Hz
• Resolution		
NTSC	656 x 492 Pixels	656 x 492 Pixels
PAL	768 x 576 Pixels	768 x 576 Pixels
• Spring Assembly		
Type	Single	Dual Nested
Length	12" (30.8 cm)	17" (43.3 cm)
• Push Cable		
Length	200' (61 m)	165' (50 m)
Diameter	0.3" (0.75 cm)	0.4" (0.90 cm)
Fiberglass Core Diameter	0.14" (0.35 cm)	0.2" (0.45 cm)
Minimum Bend Radius	2.8" (7 cm)	3.5" (9 cm)
• Pipe Capacity*	1.5" to 8" (3.8 cm to 20.3 cm)	1.5" to 8" (3.8 cm to 20.3 cm)

*When used with a 5" (12.5 cm) pipe guide.

ORDER INFORMATION

CATALOG NO.	MODEL NO.	DESCRIPTION	WEIGHT (lb.)	WEIGHT (kg)
42348	rM200A	Reel, SeeSnake MAX rM200A w/D2A Drum	36.4	16.5
47528	rM200B	Reel, SeeSnake MAX rM200B w/D2B Drum	39.2	17.8
47548	rM200	Drum, rM200 D2A	16.3	7.4
47538	rM200	Drum, rM200 D2B	19.2	8.7

RIDGID
FULL LIFETIME WARRANTY
Against Material Defects & Workmanship

rM200 D2A Drum
Catalog No. 47548

rM200 D2B Drum
Catalog No. 47538

999-997-969.10

All sales subject to Ridge Tool Company Terms and Conditions of Sales. Catalog Sheet No. R-15-A (1215) Effective Date: January 1, 2015
©2015, RIDGID, Inc. The Emerson logo and RIDGID logo are registered trademarks of Emerson Electric Co. or RIDGID, Inc. in the U.S. and other countries.
All other trademarks belong to their respective holders.

NaviTrack™

Locate with Confidence
Use NaviTrack Before You Dig

RIDGID

NaviTrack

Discover NaviTrack's Advantages And Work With Confidence.

NaviTrack navigates you to the location of underground pipes quickly and easily. It tracks energized lines and utilities with ease.

Features	NaviTrack	Conventional Locators
Antennas	6	2-3
Search Function	Yes	No
Map Function	Yes	No
Gain Control	Auto	Manual
Depth Reading	Continuous	Push Button
Background Noise Reduction	Yes	No
Standard Frequencies	25	2-4

The Key Is NaviTrack's 6-Antenna Technology

Unlike conventional locators, NaviTrack has 6 multi-directional antennas. These antennas, when combined with sophisticated software, make locating incredibly easy.

- Reduces Misleading Signals
- No "Nulls"
- No "False Peaks"
- No Special Instructions On How To Hold Locator
- Approach Target From Any Direction

"Absolutely fantastic! Locating was the most feared piece of equipment. Now everybody on our staff is going to be able to locate."

Bill Schwandt of Ryan's Modern Sewer Cleaning
Grand Rapids, Michigan

Call 1-800-769-7743 to schedule a demonstration.
Visit www.ridgid.com/navitrack for more information and to also schedule a demonstration.

Make Locating Easy!

NaviTrack utilizes two different locating functions to guide you quickly and easily to the target.

To Perform A Locate –

1. Simply power up the NaviTrack and move toward the target by maximizing the signal using the Search Function.

SEARCH FUNCTION

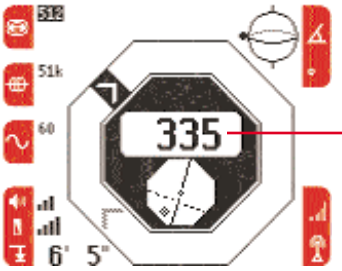

Maximize Signal Reading

2. Verify the location by switching to the Map Function with the push of a button.

MAP FUNCTION

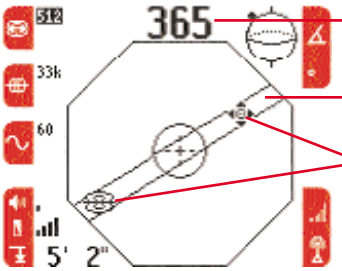

Maximize Signal Reading

Map Shows You Line Of Pipe

Distinctive On-Screen Markers Guide You To Target

NaviTrack makes locating easy.
Learn to locate with NaviTrack in minutes.

RIDGID®

NaviTrack

NaviTrack's Six-Antenna Advantage

NaviTrack provides you with all the information you need to perform better – more accurate locates.

Conventional Locators

Conventional locators have 2 or 3 antennas that must be correctly aligned with the transmitter's signal to perform a good locate.

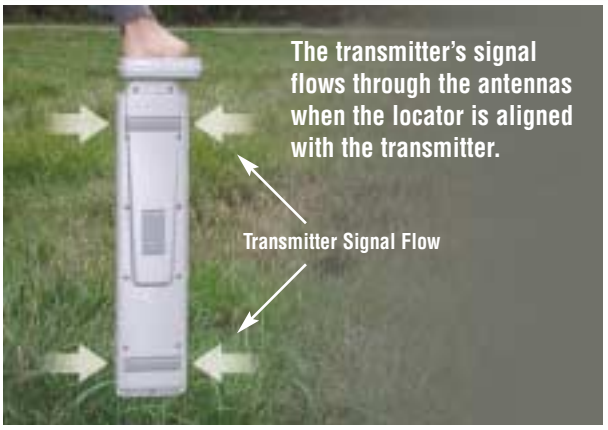

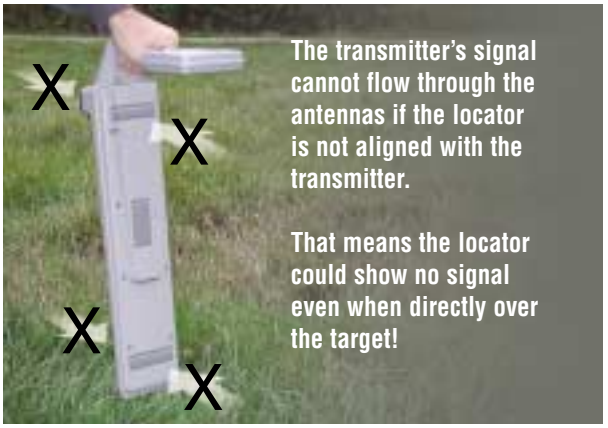

NaviTrack

NaviTrack is equipped with 6 antennas that are always aligned with the transmitter.

NaviTrack receives signal from all directions.

Its antennas are always aligned with the transmitter.

Simply power up the NaviTrack and walk directly to the transmitter.

With NaviTrack, locating can be that easy!

"We took it out yesterday to locate a sewer line inside of a building under a concrete slab. BINGO, right away we located and recorded its path in no time. The device is sure easy and fun to use."

John Cole, president, Carroll Plumbing and Heating, Inc.
Richmond, Virginia

Call 1-800-769-7743 to schedule a demonstration.
Visit www.ridgid.com/navitrack for more information and to also schedule a demonstration.

NaviTrack Up Close

NaviTrack's advanced technology provides you with all the information you need.

RIDGID

NaviTrack

Using NaviTrack's Active And Passive Trace Modes, Find And Trace Underground Utilities With Ease.

"It's like being able to see the line under the ground."

Jason Morgan, Area Supervisor
SM&P Utility Resources, Inc.
Akron, Ohio

NaviTrack has two modes to help find underground utilities:

ACTIVE TRACE MODE:
When used with a line transmitter, finds:

- Phone lines
- Water lines
- Cable TV lines
- Other metallic lines

PASSIVE TRACE MODE:
Finds buried power lines.

Prior to excavation, you may want to know if there are underground utilities in the area. NaviTrack's large backlit display provides all the information needed to make line tracing easy.

To trace a line:

- Select Active or Passive Mode
- Select Correct Frequency
- Maintain Solid Line in Crosshairs

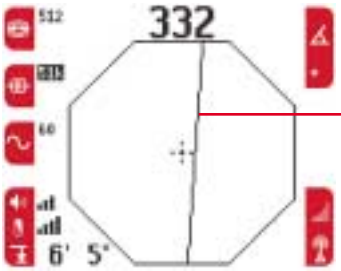

Solid Line Represents Underground Utility

NaviTrack clearly maps the line being traced.

For the advanced user, NaviTrack can continuously display:

- Depth
- Signal Strength
- Current Strength

Making difficult locates easier.

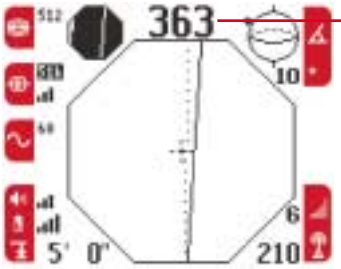

Signal Strength

Continuous Depth Reading

Current Strength On Target Line

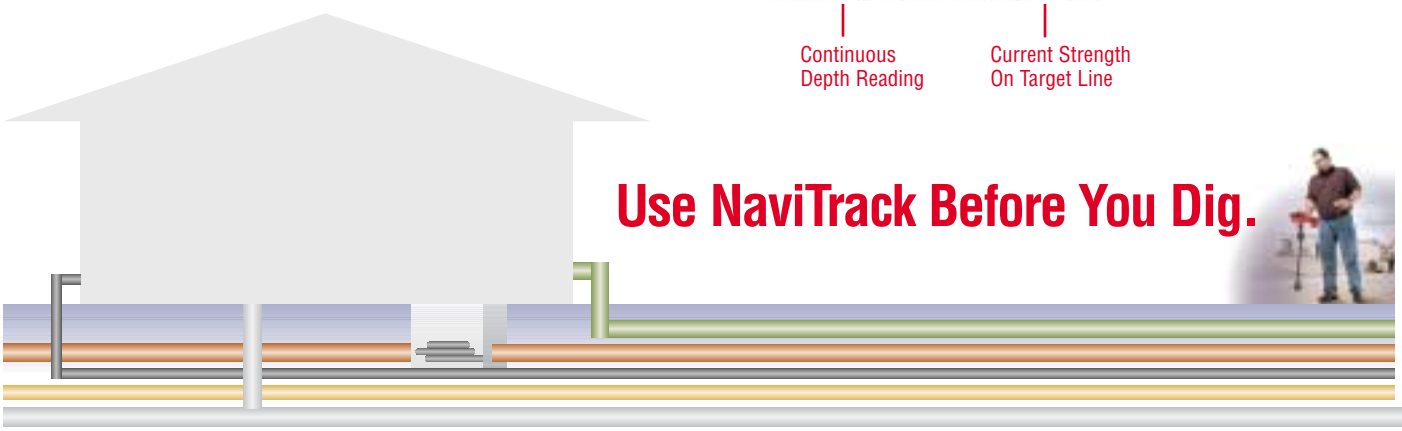

Use NaviTrack Before You Dig.

Call 1-800-769-7743 to schedule a demonstration.
Visit www.ridgid.com/navitrack for more information and to also schedule a demonstration.

Standard Equipment

- **NaviTrack Locator**
- **Hard Case**
- **Surface Markers and Clip**
- **Operator's Manual**
- **4 C-Cell Batteries**

NaviTrack

Specifications

Weight: 6 lbs.

Power Source:
4 alkaline or rechargeable C-cell batteries

Standard Frequencies:
Sonde: 512Hz, 33kHz
Active Line Trace: 512Hz, 33kHz, 51kHz
Passive AC Line Trace: 60Hz, 50Hz

Additional Frequencies:
512Hz, 575Hz, 577Hz, 815Hz, 820Hz, 982Hz, 8kHz, 8.1kHz, 8.2kHz, 9.5kHz, 9.8kHz, 27kHz, 29kHz, 33kHz, 38kHz, 51kHz, 52kHz, 65kHz, 76.8kHz, 80kHz, 81kHz, 82kHz, 117.5kHz, 200kHz, 480kHz

Ordering Information

Cat. No.	Description
96967	NaviTrack
14818	Navitrack Transmitter
15323	Flexmitter™ In-Line Transmitter
67227	Remote Transmitter
76507	KD-4000 Line Transmitter
92597	Inductive Signal Clamp

"NaviTrack is way faster…easier. With old locators, you would have to walk around 3 or 4 times and even then, you're not too sure. When you're in someone's driveway, it is very important to have an accurate locate."

Matt Civittolo, Rescue Rooter
Cleveland, Ohio

NaviTrack is part of the RIDGID family of diagnostic equipment.

All sales subject to
Ridge Tool Company terms
and conditions of sales.

RIDGID

Ridge Tool Company • Elyria, Ohio U.S.A.

www.ridgid.com/navitrack

EMERSON
Professional Tools

2003, Ridge Tool Company

Price Quotation # B298831
FERGUSON ENTERPRISES #1102

11900 ENTERPRISE DR
AUBURN, CA 95603-3734

Phone : 530-885-7473
Fax : 530-885-7566

Bid No.....: B298831
Bid Date...: 08/17/16
Quoted By: BCC
Customer.: CASH 1102 COUNTER SALES
CASH ACCOUNT
AUBURN, CA 95603

Cust Phone: 530-346-2313
Terms.....: CASH ON DEMAND
Ship To.....: CASH 1102 COUNTER SALES
CASH ACCOUNT
AUBURN, CA 95603

Cust PO#..: CITY OF COLFAX

Job Name.: CITY OF COLFAX

Item	Description	Quantity	Net Price	UM	Total
R47528	*CVR* REEL RM200 D2B NTSC	1	7038.972	EA	7038.97
R96967	NAVITRACK DIAGNOSTIC LOCATOR	1	2347.037	EA	2347.04
R35338	BALL GUIDE MICROREEL 2 PK	1	36.246	EA	36.25
R40598	MREEL SET LG 25MMPIPE	1	36.246	EA	36.25
R46708	GUIDE RM200 85MM PIPE	1	34.665	EA	34.67
R46713	GUIDE RM200 125MM PIPE	1	38.023	EA	38.02
R47793	*CVR* GUIDE CAMERA HD 25MM	1	9.340	EA	9.34

Subtotal:	$9540.54
Inbound Freight:	$0.00
Tax:	$715.54
Order Total:	$10256.08

Quoted prices are based upon receipt of the total quantity for immediate shipment (48 hours). SHIPMENTS BEYOND 48 HOURS SHALL BE AT THE PRICE IN EFFECT AT TIME OF SHIPMENT UNLESS NOTED OTHERWISE. Seller not responsible for delays, lack of product or increase of pricing due to causes beyond our control, and/or based upon Local, State and Federal laws governing type of products that can be sold or put into commerce. This Quote is offered contingent upon the Buyer's acceptance of Seller's terms and conditions, which are incorporated by reference and found either following this document, or on the web at http://wolseleyna.com/terms_conditionsSale.html. Govt Buyers: All items quoted are open market unless noted otherwise.

STAFF REPORT TO THE COLFAX CITY COUNCIL

FOR THE OCTOBER 26, 2016 COUNCIL MEETING

FROM: John Schempf, City Manager
DATE: October 20, 2016
SUBJECT: **Centennial Dam Economic Impacts on the City of Colfax**

☐ **N/A** ☐ **FUNDED** ☐ **UN-FUNDED** **AMOUNT:** **FROM FUND: 292**

RECOMMENDED ACTION: For information only.

BACKGROUND AND DISCUSSION

At the direction of Council, the City Manager met with the Executive Officer of the Local Agency Formation Commission (LAFCO) to discuss the process of potentially expanding the City of Colfax sphere of influence to extend to the Bear River. The LAFCO process requires up to 9 months for completion. The City is due for a Municipal Services Review and LAFCO recommends the City begin the process of expanding the sphere of influence by submitting an application for a review. With Council's affirmation, staff will submit an application to LAFCO as soon as possible.

In addition, the City Manager is scheduled in early November to meet with the General Manager of the Nevada Irrigation District (NID) to discuss the City's interest in the dam and determine how the City can best influence the decisions of NID which will impact Colfax economically.

Attachments:

1. Analysis by Councilmember Stockwin regarding the Bear River Campground economic impacts.

Analysis prepared by Councilmember Stockwin for September 28, 2016 City Council Meeting

The Family Campground at the bottom of Milk Ranch Rd.

• **23 campsites** that are rarely empty for 30 weeks of the summer season.

• Campers can stay for a week, which amounts to 690 paid campsites over the summer, with each allowed as many as eight occupants at one time.

• It is reasonable to assume that because there is no potable water at the campground that campers will have to buy extra in town, along with ice, soft drinks, snacks, beer, pizza, dinner, firewood, gas, etc.

• If every one of those 690 campsites spends $50 in Colfax, that would come to $34,500.

• If every one of them spends $100 the benefit to Colfax doubles to $69,000

The Group Campground at the bottom of Plum Tree Rd.

• Averaged 39 group reservations per season over the last four years.

•Each reservation can bring in 100 people, but if we conservatively cut that potential number to 50/reservation, that works out to 1,950 campers.

• If each camper spends $25 in town, Colfax takes in $48,750. If they each spend $50 in Colfax the number would double to $97,500.

Totals

Family Campground campers spend $50/campsite (**$34,500**) and Group Campground campers spend $25 each (**$48,750**) that would amount to **$83,250** in summer money for Colfax businesses.

If each Family Campground site spent **$100 ($69,000**), and Group Campground campers spent **$50** each **($97,500**) Colfax businesses get **$166,500.**

STAFF REPORT TO THE COLFAX CITY COUNCIL

FOR THE OCTOBER 26, 2016 COUNCIL MEETING

FROM: John Schempf, City Manager
DATE: October 20, 2016
SUBJECT: **Old Colfax Hotel Update**

☐ **N/A** ☐ **FUNDED** ☐ **UN-FUNDED** **AMOUNT:** **FROM FUND: 292**

RECOMMENDED ACTION: For information only.

BACKGROUND AND DISCUSSION

The City Manager, Building Official and City Attorney recently met with owner of the Colfax Hotel to outline the City's displeasure with progress on the hotel.

The owner of the hotel has agreed to allow the City Engineer to inspect the viability of the building at City expense. If it is determined the building is structurally sound enough for improvements, the owner has agreed to a two-step process to create a viable business entity at the hotel.

The first step will be to remove unpermitted work and within 90 days complete the minor repairs promised in Permit #16025, which was issued April 5, 2016 and expired October 5, 2016.

In the second phase of remediation, the owner will submit a planning application and begin the process for approval of his proposed business plan.

Staff has concerns the owner's vision for the building will not be financially viable. He must be in compliance with current building and ADA codes. Utility connection fees may be cost prohibitive.

Attachments:

1. Excerpt from Colfax Record.

Article from the Colfax Record
Thursday Oct 08 2015
Local businessman has big plans for Colfax Hotel *Property inactive for 30 years*
By: Steve Archer, Reporter

A Rocklin businessman is striving to breathe new life into the historic Colfax Hotel and he hopes to have it open by next summer.

Brian Figueroa purchased the hotel nearly three years ago and is now working on improving the building's outside.

"The first phase, over the next four to six months, is to get the place looking beautiful from the outside, including landscaping," Figueroa said. "I'm looking for the right strategic partners to rent out to. Hopefully, there can be a nice bar and restaurant downstairs and an event center in the back."

Figueroa, a landscape contractor for the last 35 years, grew up in Grass Valley. He said his connection to the area continues to grow stronger every day.

"Every time I go up to Colfax, I fall more in love with the history and the building," Figueroa said. "I have the tenacity to handle this kind of project and I have all the subcontractors I need to do the work."

And, despite growing interest in the property, Figueroa said, "I'm not selling."

"There are people who want to buy it," Figueroa added. "I'm sincere; if I didn't like it, I would have sold it. I'm working with the city and I'm enjoying the process. Two-and-a-half weeks ago, we got the green light to start making a difference."

Although nothing has happened on the property for 30 years, according to Figueroa, he plans to bring the mixed-use space zoned for commercial and residential up to modern standards.

"I'm excited about being part of its history," Figueroa said. "The downstairs will be retail-commercial and I will rent out the upstairs. Ultimately, I'd like the downstairs to be a 'Cheers' for the city. For the eight units upstairs; I would like to rent the majority of them and keep one for myself."

"This is a long-term journey and commitment," Figueroa added. "I want to revise the hotel in a respectful manner and put it on the map."

Figueroa said phase II would be to remodel the interior of the first floor and phase III will consist of converting the upstairs to condos or apartments.

"My goal is to have it up and ready by spring-summer of next year," Figueroa said. "We will be rocking and rolling next summer."

Figueroa added that the hotel will sell itself to possible tenants “although anyone interested in moving into the space or potential angel-investors,” can contact Figueroa through colfaxhotel.com.

“I think potential tenants will come just from us working with the city, the rebuilding activity and advertising,” Figueroa said. “I feel strongly that the right strategic stores are going to come to me. I’m going to weed them out and be selective.”

However, before the Colfax Hotel reopens, Figueroa would like to see a missing piece of history returned.

“We’re looking for the missing statue of the miner,” Figueroa said. “We would like it returned.”

According to Colfax City Council minutes, permits were pulled in September for the exterior cleanup of the building, including new decking and railing, paint and new windows. The city held an abatement hearing in early September but continued the meeting for 45 days to monitor the cleanup process. The city may reduce enforcement of the abatement if Figueroa complies with a promised schedule of a 90-day cleanup.

Ron Figueroa, Brian’s father, is helping with the project.

“We’re in the process of cleaning up,” the elder Figueroa said. “I’d like to get it painted before the winter comes. It’s got a good roof on it so I’m not worried about that.

“We’re buying all the materials and lumber locally, from Hills Flat Lumber,” Ron Figueroa added. “We’re trying to keep everything local. We’re going to get some landscaping in there, make it beautiful and then get some business in there. That’s our purpose.”