NOTICE AND INFORMATION TO BIDDERS

NOTICE IS HEREBY GIVEN that the City of Colfax, California, will receive bids for the furnishing of all labor, materials, equipment, transportation and services for **Pedestrian and ADA Improvements to Colfax Transit Center Project (East Oak Street Sidewalk Improvements)** located in the City of Colfax, Placer County, California. The site of this project is described as follows sidewalk located on East Oak Street between Rail Road Street and South Auburn Street.

1. TIME AND PLACE FOR SUBMISSION AND OPENING

Sealed bid proposals shall be submitted on or before **April 6, 2016, at the hour of 4:00 p.m.** at the Office of the City Clerk, City of Colfax, City Hall, 33 South Main St, Colfax, California.

Any bid received after the time specified will be returned to the bidder unopened.

All bids will be opened, announced and recorded by the City Clerk at the time and place specified, in a public meeting called for that purpose.

The City Clerk will report the bids to the City Council of the City of Colfax in regular session.

Each bid shall be on forms provided by the City, and shall in all respects comply with this Notice and Information to Bidders and the Contract Documents.

2. SECURING DOCUMENTS

The Contract Documents, including drawings and specifications, are on file and may be examined at the office of the City Clerk of the City of Colfax, City Hall, 33 S Main Street, Colfax, California. Copies of the Contract Documents may be obtained at the Office of the City Clerk upon submitting a non-refundable fee of **$20.00**. Copies may be obtained by pickup only.

Drawings included in the Contract Documents and made a part thereof are listed as follows: East Oak Street Sidewalk Improvements.

3. PRE-BID CONFERENCE

The City shall not conduct a pre-bid conference for the project.

4. BID FORM

In order to receive consideration, all bids shall be made in accordance with the following instructions:

(a) Bids shall be made upon the form provided therefor, properly executed and with all items filled out; numbers shall be stated both in writing and in figures; the signature of all persons signing shall be in longhand. The completed form shall be free of interlineations, alterations or erasures. No verbal, telegraphic, or telephonic proposals or modifications will be considered.

(b) Bids shall not contain any recapitulation of the work to be done. Alternative proposals will not be considered unless specifically called for.

(c) Each bid shall be accompanied by cash, a certified or cashier's check, or a bidder's bond in the sum of not less than 10% of the total aggregate of the bid (including highest alternate bid), payable to the order of the City of Colfax, and shall be forfeited if the successful bidder fails, refuses, or neglects to file satisfactory bonds as required by the Contract Documents, or to enter into the Agreement for Construction within the time specified in the Contract Documents. If the bid is not accepted by the City within sixty (60) days after the time set for the opening of bids, or if the bidder to whom the contract is awarded executes and delivers to the City the required Contract Documents, the cash, bid bond, or the amount of the certified or cashier's check will be returned to the bidder.

(d) Before submitting a bid, each bidder shall carefully examine the drawings and read the specifications and other Contract Documents. He shall visit the site of the project and shall fully inform himself as to all existing conditions and limitations under which the work is to be performed, and he shall include in his bid sums to cover the cost of all items necessary to perform the work as set forth in these Contract Documents. No allowance will be made to any bidder because of lack of such examination or knowledge.

(e) Each bid shall be addressed to the Community Services Director of the City of Colfax and shall be delivered to the City Clerk at her office on or before the date and time specified in the published Notice to Bidders. The bid shall be enclosed in a sealed envelope bearing the title of the work, the name of the bidder and the date and hour of the opening. It is the sole responsibility of the bidder to see that his bid is received in proper time. Any bid received after the scheduled closing time for receipt of bids shall be returned to the bidder unopened.

5. **PROOF OF COMPETENCY OF BIDDER**

Any bidder may be required to furnish evidence satisfactory to the City that he and his proposed subcontractors have sufficient means and experience in the type of work called for to assure completion of the contract in a satisfactory manner.

6. **WITHDRAW OF BID**

Any bidder may withdraw his bid, either personally or by a written request, at any time prior to the scheduled time for opening of bids. No bidder may withdraw his bid for a period of sixty (60) days after such time.

7. **LICENSING; CONTRACTOR'S LICENSE CLASSIFICATION**

No bid will be accepted from a contractor who has not been licensed in accordance with the Contractor's State License Law, Business and Professions Code section 7000.

The contractor shall possess a **Class A, C12 or C32** license at the time the contract is awarded.

8. **SALES TAX**

Bidders shall have included in their bids any and all federal, state and local taxes of whatever nature in connection with material to be furnished to the City. Absolutely no extras shall be allowed for such by the City.

9. **WAGE RATES**

Pursuant to Labor Code section 1770, the California Director of Industrial Relations has specified the general prevailing wage rates for all public projects in California. The wages to be paid to all workers on such projects shall not be less than those specified in such wage rate determination.

10. **CLARIFICATION OF DRAWINGS AND DOCUMENTS BY ADDENDA**

If any bidder is in doubt as to the true meaning of any part of the drawings, specifications, or other Contract Documents, or finds discrepancies in, or omissions from, the drawings or specifications, he may submit to the **City Clerk** a written request for a clarification or correction thereof not later than five (5) days before the date bids will be opened. The person submitting the request will be responsible for its prompt delivery. Any clarification or correction will be made by written addendum, which shall be mailed or delivered to each person receiving a set of such documents. The City will not be responsible for any other explanation or interpretation of the Contract Documents.

11. **ADDENDA**

Any addenda issued before the time in which to submit bids expires shall form a part of the Contract Documents and shall be covered in the bid. Each bidder shall confirm receipt of any and all addenda in the space provided in Paragraph 1 of the bid form.

12. BIDDERS INTERESTED IN MORE THAN ONE BID

No person, firm, or corporation shall be allowed to make or file or be interested in more than one bid for the same work, unless alternate bids are called for. A person, firm or corporation submitting a subproposal to a bidder, or who has quoted prices on materials to a bidder, is not thereby disqualified from submitting a subproposal or quoting prices to other bidders.

13. LIST OF SUBCONTRACTORS

All bidders must submit with their bids a list of their proposed subcontractors in compliance with sections 4100-4114 of the Public Contracts Code of the State of California. Forms for this designation are furnished in the Contract Documents.

14. EXAMINATION OF PROPOSED LOCATION AND CONTRACT DOCUMENTS

Bidder shall, prior to submitting a bid, carefully examine the location of the proposed project, and review the Contract Documents to become fully aware to the work to be done.

15. OPENING OF BIDS

Bids will be opened and publicly read aloud at the time and place scheduled in the published Notice to Bidders.

16. REJECTION OF BIDS; WAIVER OF IRREGULARITIES; MATHEMATICAL ERRORS

The City of Colfax, as the interests of the City may require, reserves all rights to reject any and/or all bids, to accept or reject any items of the bid, to utilize any alternate procedure as authorized by Public Contract Code sections 20166 and 20167, and to waive any informality or minor irregularities in the bids or bidding.

When an obvious mathematical error in addition, subtraction, multiplication, and division appears on the face of the bid, City may, but shall not be obligated to, correct any such error and compute the total amount bid by said bidder on the basis of the corrected figure or figures to determine which bidder has submitted the lowest bid. Where the City corrects such a facial error, its existence shall not entitle the bidder to withdraw the bid.

When an item price is required to be set forth in the bid and the total price for the item does not agree with a figure which is derived by multiplying the item price by City's estimate of the quantity of work to be performed for said item, the item price shall prevail over the total extended price for the item. The total to be paid for each item shall be based upon the item price and not the total extended price for the item. If the bid contains only a total extended price for the item, and not the item price, City will determine the item price by dividing the total price for the item by the City's Estimate on the bid form of the quantity of work to be performed for said item.

17. ALTERNATES

The City reserves all rights to accept or not accept alternates as set forth on the bid form.

18. AGREEMENT FOR CONSTRUCTION, BONDS, AND INSURANCE

The successful bidder will be required to execute the Agreement for Construction and post a Labor and Materials Payment Bond and a Performance Bond, each in an amount equal to one hundred percent (100%) of the contract price and duly issued by a corporate surety authorized to do business in California and satisfactory to City no later than ten (10) days after notification of award of the contract, and before the City will execute the Agreement for Construction.

The successful bidder will also be required to submit copies of insurance policies and original certificates and amendatory endorsements effecting coverage as specified in the Contract Documents no later than ten (10) days after notification of award of the contract and before this City will execute the Agreement for Construction. The certificates and endorsements should be on forms provided by the City, or on other than City forms, provided the certificate and endorsement conform to the requirements of the Contract Documents.

Before final payment, the successful bidder must also guarantee his work and secure that guarantee with a Warranty & Maintenance bond in an amount no less than twenty percent (20%) of the total amount of the contract.

19. CONTRACT DOCUMENTS

The form of agreement which the successful bidder, as Contractor, will be required to execute and the form of the bonds which he will be required to furnish are included in the Contract Documents and should be carefully examined by each bidder. The agreement and bonds will be executed in two (2) original counterparts. The complete contract consists of the Contract Documents as defined in section 7 of the agreement, and are intended to cooperate and be complementary so that any work called for in one and not mentioned in the other, or vice versa, is to be executed the same as if

mentioned in all said documents. The intention of the documents is to include all labor, materials, equipment, transportation and services necessary for the proper execution of the work.

20. TIME OF COMPLETION

The work shall be commenced upon issuance of the City's "Notice to Contractor to Proceed" and shall be fully completed no later than **45** calendar days thereafter, or such additional time as may have been provided by change order, pursuant to the Contract Documents.

21. PROGRESS PAYMENTS; WITHHOLDS

Monthly progress payments shall be made to the Contractor for the value of the work completed during the preceding month, less a ten percent (10%) security withhold.

Pursuant to Public Contracts Code section 22300, at the request and expense of the Contractor, securities equivalent to the amount withheld shall be deposited with the City or with a state or federally chartered bank in California as the escrow agent, who shall pay such monies to the Contractor upon satisfactory completion of the contract. Alternatively, at the request and expense of the Contractor, the security withheld shall be paid by City directly to the escrow agent as provided in section 22300.

Securities eligible for investment under this section shall include those authorized by section 22300.

The Contractor shall be the beneficial owner of any securities substituted for monies withheld and shall receive any interest thereon.

22. SHORING

Labor Code sections 6705 and 6707 apply to this project which involves the construction of trenches or open excavations. Each bid submitted in response hereto shall contain, as a bid item, adequate sheeting, shoring, and bracing, or equivalent method, for the protection of life or limb, which conforms to applicable safety orders.

23. SUBMITTING PURCHASE ORDERS

Within thirty-five (35) days after the execution date of the contract, the Contractor shall submit to the City for approval, copies of purchase orders of all materials and equipment to be incorporated in this contract.

24. DECLARATION FOR FINAL PAYMENT

After the completion of the work of this contract, the Contractor shall file with the City his declaration under penalty of perjury stating that all workers and persons employed, all firms supplying the materials and all subcontractors upon the project, have been paid in full and that there are no bills outstanding against the project for either labor or materials except certain items, if any, to be set forth in detail in the declaration. The filing of such declaration by the Contractor and the submittals referred to in Article 25 of the General Conditions shall be a condition precedent to Contractor's receipt of the final payment on this contract.

25. **NON-DISCRIMINATION**

Contractor shall comply with state and federal nondiscrimination provisions set forth in Articles 12 and 13 of the General Conditions.

26. **GENERAL CONDITIONS**

All bidders hereby are advised that the City of Colfax has adopted General Conditions for this work which may differ substantially from the general conditions provided for private projects or projects undertaken by other governmental agencies. Contractors are admonished to carefully read the General Conditions, as well as the special provisions and technical specifications, and are advised that the General Conditions shall be enforced strictly.

27. **PROJECT MANAGER**

The name, address, and telephone number of the Project Manager for all purposes is:

Wes Heathcock
33 South Main Street
Colfax, CA 95713

Telephone: (530) 346-2313

City Clerk
City of Colfax

TABLE OF CONTENTS

Page

GENERAL CONDITIONS:

ARTICLE 1. DEFINITIONS AND PRINCIPLES OF INTERPRETATION. 1

Section 1.01. Terms, Titles, or Phrases. 1
Section 1.02. Addendum/Addenda. 1
Section 1.03. Bid. 1
Section 1.04. City Council. 1
Section 1.05. Contract Documents. 1
Section 1.06. Contract Drawings or Plans. 2
Section 1.07. Contractor. 2
Section 1.08. City. 2
Section 1.09. Project Manager. 2
Section 1.10. City Inspector. 2
Section 1.11. Day. 3
Section 1.12. General Intent of Contract Documents. 3
Section 1.13. Harmonization of Various Parts of Contract Documents. 3
Section 1.14. Interpretations of Plans. 3
Section 1.15. Interpretations. 4
Section 1.16. Materials. 4
Section 1.17. Project. 4
Section 1.18. Project Architect. 4
Section 1.19. Function of Project Architect 4
Section 1.20. Reference to Codes. 5
Section 1.21. Site. 5
Section 1.22. Special Provisions. 5
Section 1.23. Specifications. 5
Section 1.24. Subcontractor. 5

ARTICLE 2. BONDS AND BONDING; INDEMNIFICATION AND INSURANCE. 6

Section 2.01. Bonds: Time to Submit. 6
Section 2.02. Performance Bond. 6
Section 2.03. Labor and Materials Payment Bond. 6
Section 2.04. Warranty and Maintenance Bond. 6
Section 2.05. Indemnification. 7
Section 2.06. Indemnification of Adjacent Property Owners. 7
Section 2.07. Insurance. 8
Section 2.08. Insurance; Endorsements. 9
Section 2.09. Insurance; Other Provisions. 9
Section 2.10. Insurance; Failure to Maintain. 10
Section 2.11. Insurance; Subcontractors. 10

Section 2.12. Insurance; Certificates and Endorsements. 11
Section 2.13. Worker's Compensation; Certificate; Posting. 11

ARTICLE 3. TIME OF WORK. 12

Section 3.01. Schedule of Work and Cost Breakdown. 12
Section 3.02. List of Materials and Schedule of Unavailable Materials. 12
Section 3.03. Approval of Progress Schedule and Materials List. 13
Section 3.04. Commencement of Work. 13
Section 3.05. Time of Essence. 13
Section 3.06. Date of Completion. 13
Section 3.07. Extensions of Time; Unavoidable Delays. 14
Section 3.08. Notice of Delays. 14
Section 3.08.05. Change Order No Basis for Delay Claim. 15
Section 3.09. Investigation; Procedure. 15
Section 3.10. Discretionary Time Extensions for Best Interest of City. 15
Section 3.11. Liquidated Damages. 16
Section 3.12. Extension of Time Not a Waiver. 16
Section 3.13. Suspensions Exceeding One Year. 16
Section 3.14. Effect of Stop Work Notice. 17

ARTICLE 4. INTERPRETATION OF DRAWINGS AND SPECIFICATIONS. 17

Section 4.01. Sections of Drawings and Specifications. 17
Section 4.02. Coordination of Drawings, Specifications, and Work. 17
Section 4.03. Interpretation and Additional Instructions. 18
Section 4.04. Dispute as to Contract Requirements. 18
Section 4.05. Supplemental Drawings. 19
Section 4.06. Contractor's As-Built Drawings. 19

ARTICLE 5. SHOP DRAWINGS AND MANUFACTURERS' INSTRUCTIONS. 19

Section 5.01. Shop Drawings and Manufacturers' Instructions. 19
Section 5.02. Submission of Shop Drawings. 20
Section 5.03. Approval of Shop Drawings. 20
Section 5.04. Shop Drawings Showing Variation from Contract. 21
Section 5.05. Effect of Approval of Shop Drawings. 21

ARTICLE 6. MATERIALS AND PRODUCTS. 21

Section 6.01. Quality of Materials and Products. 21
Section 6.02. Better Material or Process. 22
Section 6.03. Industry Standards. 22
Section 6.04. Materials and Products Storage. 22
Section 6.05. Original Packages or Containers; Labels. 23
Section 6.06. Protection of Materials and Equipment. 23
Section 6.07. Providing and Paying for Materials. 23
Section 6.08. Warranty of Title. 23

Section 6.09. Patents and Royalties. 24
Section 6.10. Payment of Federal or State Taxes. 24

ARTICLE 7. SUBSTITUTIONS AND APPROVALS. 24

Section 7.01. Drawings and/or Other Data. 24
Section 7.02. Equal Materials; Substitutions. 25
Section 7.03. Effect of Allowance. 25
Section 7.04. Time for Proposing Substitutions; Decision. 25
Section 7.05. Samples and Testing of Proposed Substitutions; Costs of Adapting to Work. 26

ARTICLE 8. SAMPLES AND TESTING. 26

Section 8.01. Materials and Work Which Must be Tested; Contractor's Expense. 26
Section 8.02. Materials Which May be Tested. 26
Section 8.03. Testing. 27
Section 8.04. Selection of Samples. 27
Section 8.05. Delivery of Samples. 27
Section 8.06. Approval of Samples. 27
Section 8.07. Damage Due to Testing. 28
Section 8.08. Retesting. 28
Section 8.09. Effect of Sampling and Testing. 28

ARTICLE 9. REJECTION AND REPLACEMENT OF WORK AND MATERIALS. 28

Section 9.01. Rejection of Materials and Workmanship. 28
Section 9.02. Removal of Rejected Materials. 29
Section 9.03. Failure to Remove Unsatisfactory Materials. 29

ARTICLE 10. SUPERVISION AND LABOR. 29

Section 10.01. Skilled Labor. 29
Section 10.02. No Tenancy. 30
Section 10.03. Dismissal of Unsatisfactory Employees. 30
Section 10.04. Personal Attention and Superintendent; Contractor's Agent. 30
Section 10.05. Inspection of the Work of Other Contractors. 30

ARTICLE 11. SUBCONTRACTORS; LISTING AND BID; SUBSTITUTION. 31

Section 11.01. Subcontracting. 31
Section 11.02. Disputes Between Subcontractors and/or Contractor. 31
Section 11.03. Listing of Subcontractors. 31
Section 11.04. Dealings with Subcontractors. 32
Section 11.05. Termination of Unsatisfactory Subcontractors. 32

ARTICLE 12. STATE REQUIREMENTS REGARDING WAGES/HOURS & EQUAL OPPORTUNITY. 32

Section 12.01. Applicability of Article. 32
Section 12.02. Prevailing Wage Rate. 32
Section 12.03. Payment of Prevailing Wage Rates. 33
Section 12.04. Travel and Subsistence Pay. 33
Section 12.05. Wage Rate for Crafts Not Listed. 33
Section 12.06. Records of Hours Worked and Wages. 33
Section 12.07. Underpayment of Wages. 33
Section 12.08. Penalties. 34
Section 12.09. Apprentices. 34
Section 12.10. All Employees on Payrolls; Submission of Records. 34
Section 12.11. Hours of Work; Approval of Schedules. 35
Section 12.12. Compliance with State Anti-Discrimination Laws. 35

ARTICLE 13. FEDERAL REQUIREMENTS. 36

Section 13.01. Applicability of Article. 36
Section 13.02. Davis-Bacon Act. 36
Section 13.03. Compliance with Federal Anti-Discrimination Laws. 46
Section 13.04. Compliance with Contract Hours and Safety Standards Act. 47

ARTICLE 14. PROTECTION OF WORKERS AND PUBLIC PROPERTY. 48

Section 14.01. Protection of Persons and Property. 48
Section 14.02. Protection and Repair of Work. 48
Section 14.03. Protection of Workers. 48
Section 14.04. Working Limits and Regulations. 49
Section 14.05. Protection of Existing Improvements. 49
Section 14.06. Traffic Signals and Traffic Control. 49
Section 14.07. Security of the Site. 50
Section 14.08. Watchmen. 50
Section 14.09. Removal of Barricades. 50

ARTICLE 15. PROTECTION OF ADJACENT PROPERTY. 50

Section 15.01. Protection of Adjacent Property; Notices. 50
Section 15.02. Fire Protection. 51
Section 15.03. Indemnity for Losses to Adjacent Property. 51
Section 15.04. Emergency Safety Actions. 52

ARTICLE 16. CONDUCT AND PROSECUTION OF THE WORK. 52

Section 16.01. Basic Standard. 52
Section 16.02. Surveys. 52
Section 16.03. Layout Work. 53
Section 16.04. Contractor's Equipment. 53
Section 16.05. Clearing Obstructions. 53

Section 16.06. Dust Control. 53
Section 16.07. Existing Conditions Shown on Drawings. 54
Section 16.08. Discovery of Unknown Conditions, Change Orders. 54
Section 16.09. Equipment and Methods. 54
Section 16.10. Approval of Contractor's Plans. 55
Section 16.11. Temporary Facilities and Services. 55
Section 16.12. Proof of Compliance with Contract. 55
Section 16.13. Coordination of Work. 55
Section 16.14. Joining Work. 56

ARTICLE 17. CHANGE ORDERS. 56

Section 17.01. No Changes Without Consent. 56
Section 17.02. Change Orders Authorized. 57
Section 17.03. Minor Change Orders by City Manager. ..... **Error! Bookmark not defined.**
Section 17.04. Change Orders Regarding Time for Completion. 57
Section 17.05. Effect on Sureties. 57

ARTICLE 18. INSPECTIONS. 57

Section 18.01. Access for Inspection. 57
Section 18.02. Inspections. 58
Section 18.03. Authority of City Inspector; Stop Work Notices. 58
Section 18.04. Effect of Inspections. 58
Section 18.05. Inspection of Completed Work. 59
Section 18.06. Notice to City of Inspection. 59
Section 18.07. Authority of Project Manager. 59
Section 18.08. Building Inspectors. 59

ARTICLE 19. PUBLIC UTILITIES. 60

Section 19.01. Utilities Used During Construction. 60
Section 19.02. Lighting. 60
Section 19.03. Permanent Utilities. 60
Section 19.04. Toilet Facilities for Workers. 61

ARTICLE 20. PERMITS, LICENSES, ORDINANCES, AND REGULATIONS. 61

Section 20.01. Basic Standard. 61
Section 20.02. Permits. 61
Section 20.03. Compliance with Laws and Regulations. 61
Section 20.04. Compliance with Laws and Regulations Indemnity. 62
Section 20.05. Specific State Laws and Regulations. 62
Section 20.06. Compliance with Conditions of Permits. 63

ARTICLE 21. PRESERVATION AND CLEANING. 63

Section 21.01. Protection of Work. 63
Section 21.02. Periodic Cleaning of Project. 63
Section 21.03. Final Cleaning of Project. 63

ARTICLE 22. OCCUPANCY BY CITY. 64

Section 22.01. Use of Completed Work. 64
Section 22.02. Repairs or Renewal in the Work. 64
Section 22.03. Effect of Occupancy. 64
Section 22.04. Coordination with Other Activities. 64

ARTICLE 23. PROGRESS PAYMENTS. 65

Section 23.01. Submission of Monthly Progress Payment Claims. 65
Section 23.02. Payment; Withholds. 66
Section 23.03. Posting Securities in Lieu of Withholds. 66
Section 23.04. Retaining Additional Amounts; Grounds. 67
Section 23.05. Disbursement of Withheld Amounts. 68
Section 23.06. Correction of Statement and Withholding of Payment. 68
Section 23.07. Effect of Progress Payments. 68

ARTICLE 24. FINAL INSPECTION. 69

Section 24.01. Notice of Final Inspection. 69
Section 24.02. Punch List. 69

ARTICLE 25. ACCEPTANCE AND FINAL PAYMENT. 69

Section 25.01. Contractor's Request for Final Payment. 69
Section 25.02. Additional Submissions. 69
Section 25.03. Project Manager's Final Estimate and Final Payment. 70
Section 25.05. Recordation of Notice of Completion and Acceptance of Contract. 71
Section 25.06. Notice of Completion. 71
Section 25.07. Retention Release. 71
Section 25.08. Retentions for Stop Notices. 71
Section 25.09. Non-Waiver. 72

ARTICLE 26. GUARANTEES. 72

Section 26.01. Guarantee Required. 72
Section 26.02. Form of Guarantee. 72

ARTICLE 27. CITY'S RIGHT TO TERMINATE CONTRACT. 73

Section 27.01. Termination for Cause. 73
Section 27.02. Termination for Cause – Procedure. 74

Section 27.03. Reconstruction in the Event of Loss. 74
Section 27.04. Option in Event of a Loss. 75
Section 27.05. Provisions for Termination of Contract. 75
Section 27.06. Termination for Convenience. 75

ARTICLE 28. ADDITIONAL PROVISIONS. 75

Section 28.01. Conflict of Interest. 75
Section 28.02. Notices. 76
Section 28.03. No Verbal Agreements. 76
Section 28.04. Examination of Proposed Project Location and Contract Documents..... 76
Section 28.05. Notice of Potential Claims; Appeal of the Determination of Claim. 77
Section 28.06. Anti-Trust Assignment. 78
Section 28.07. Contractor Not Agent, Nor Employee. 78

APPENDIX 1

State Wage Rates:

Pursuant to Article 12 of the General Conditions, the Contractor shall pay no less than the minimum wage rates set forth in the determination of the Department of Industrial Relations (DIR). However, each bidder is responsible to ascertain whether any amendments have been issued by the DIR, and to utilize the correct rates in calculating the bid.

Direct inquiries to the DIR, Prevailing Wage Rate Unit, Public Works, (415) 703-4774. Website: http://www.dir.ca.gov/DLSR/statistics_research.html#PWD.

APPENDIX 2

Federal Wage Rates:

Pursuant to Article 13 of the General Conditions, the following are the minimum wage rates mandated by the Davis-Bacon Act and the Department of Labor (DOL). The City shall provide a printed hard copy of federal rates to the Contractor pursuant to Davis Bacon Act.

The DOL requires payment of the most recent wage rates in effect on the eleventh (11th) day preceding opening of the bids. The attached rates therefore are subject to change by the DOL, and such new rates must be paid.

If the rates are changed, the City will issue an addendum so stating. However, each bidder is responsible to ascertain and utilize the correct wage rates before submitting his bid.

Direct inquiries to the Department of Labor, Wage and Hour Division, (916) 978-6123, or online at http://www.wdol.gov/dba.aspx.

GENERAL CONDITIONS

ARTICLE 1. DEFINITIONS AND PRINCIPLES OF INTERPRETATION.

Section 1.01. Terms, Titles, or Phrases.

Whenever the following terms, titles, or phrases are used in the Contract Documents, the intent and meaning thereof shall be as defined in this article.

Section 1.02. Addendum/Addenda.

"Addendum" or "Addenda" written documents furnished by the City before award of the contract, interpreting plans and specifications or answering questions of intended bidders, and shall be incorporated in and are a part of the Contract Documents.

Section 1.03. Bid.

"Bid" shall mean the offer of the bidder to do the work, when submitted on the prescribed bid form, properly executed and bonded.

Section 1.04. City Council.

"City Council" shall mean the duly elected officials constituting the City Council of the City of Colfax.

Section 1.05. Contract Documents.

The "Contract Documents" shall include the notice and information to bidders, the bid form, the designation of subcontractors, the agreement for construction, the bidder's bond, the performance bond, the payment bond, these general conditions, the special provisions, the technical specifications, the City Construction standard specifications, city improvement standards, city standard drawings, the contract drawings and plans, all duly issued addenda, interpretations, and change orders, supplemental drawings, shop drawings, and manufacturers' instructions approved pursuant to Article 5 hereof, and the Contractor's guarantee and Warranty and Maintenance bond.

Section 1.06. Contract Drawings or Plans.

The "contract drawings" (sometimes hereinafter referred to as "drawings") or "plans" are the official plans and working drawings which show the location, character, dimensions and details of the work to be performed, all supplemental drawings issued by the City, and all drawings submitted by the Contractor and approved by the City pursuant to the Contract Documents. Once approved, all such drawings are incorporated into and become a part of the Contract Documents.

Section 1.07. Contractor.

"Contractor" shall mean the person or persons, partnership, or corporation, who have entered into the agreement for construction of this project with the City of Colfax, or his or their legal representatives, or successors, assigns, executors, or heirs.

Section 1.08. City.

"City" shall mean the City of Colfax, State of California, a municipal corporation. The City is sometimes designated "Owner" in the Contract Documents.

Section 1.09. Project Manager.

The "Project Manager" is **Wes Heathcock** or, at the City's election, the architect or architectural firm employed or engaged as an independent contractor by the City to perform the services of a general Project Manager, including those services set forth in the Contract Documents.

The City Council hereby designates the Project Manager as the City's agent to perform all functions delegated to the Project Manager by the Contract Documents, to monitor the performance by Contractor of the work required by the Contract Documents, and to supervise the City Inspector(s).

The Project Manager will have the general supervision and direction of the work. The Project Manager shall have the right to accept or reject materials or workmanship; to decide the amount due at each payment period; and to determine when the Contractor has complied with the conditions of the contract.

Section 1.10. City Inspector.

The "City Inspector" shall mean the person or persons employed or engaged as (an) independent contractor(s) by the City to inspect the performance of the work by the Contractor for compliance with the Contract Documents. He hereby is designated as an agent of the City for such purpose and no other. He is supervised by, and reports

to, the Project Manager. The authority of the City Inspector to monitor the work shall be strictly limited to that authority specified herein, and no additional authority has been granted nor shall be inferred. The Project Manager may be designated as the City Inspector, in which case he shall perform the function and have the authority of both positions.

Section 1.11. Day.

Unless otherwise expressly defined, a "day" shall mean a calendar day of 24 hours, including each and every day of the year.

In computing days, the first day is excluded and the last day is included, unless it is a holiday, and then it also is excluded. Civil Code section 10 shall apply to such computations.

Section 1.12. General Intent of Contract Documents.

It is the overriding intent of the Contract Documents that the work performed shall result in a complete and operable project in satisfactory condition for occupancy, with all mechanical equipment in functional operating condition and fit for the use for which it is intended, and which complies in all respects with the Contract Documents. No extra compensation will be allowed for anything omitted but fairly implied to be included in the Contract Documents. The prices paid for the various items in the bid shall include full compensation for furnishing all labor, materials, tools, equipment and incidentals, and doing all work necessary to complete the finished product as provided by the Contract Documents.

Section 1.13. Harmonization of Various Parts of Contract Documents.

All the various parts of the Contract Documents, including the specifications and plans and drawings, are intended to be explanatory of one another. Any work shown on the contract drawings and not on the specifications, or vice versa, is to be executed as if indicated in both. In case of conflict, the specifications shall govern over the contract drawings, special provisions shall govern over both the contract drawings and the general conditions, and subsequent addenda, interpretations, or change orders shall govern over the original documents, unless a different order of preference is necessary to comply with the specific purpose and intent of the contract.

Section 1.14. Interpretations of Plans.

In the event of a conflict between any of the documents which constitute the Contract Documents, it is the responsibility of the Contractor to notify the Project Manager and request an interpretation or correction, pursuant to the procedure set forth in Article 4 of these General Conditions.

Section 1.15. Interpretations.

"Interpretations" are all clarifications, additional instructions, and explanations issued by the Project Manager pursuant to Article 4 hereof, after award of the contract.

Section 1.16. Materials.

"Materials" is a generic term which shall include all building materials, articles, supplies, and equipment delivered to the project for incorporation in the work. "Materials" includes everything incorporated into the work except labor, unless otherwise noted.

Equipment shall mean all pre-manufactured or partially preassembled products or components, assembled or partially assembled before delivery to the site.

Section 1.17. Project.

"Project" shall mean the whole of the work referenced in the Contract Documents.

Section 1.18. Project Architect.

The "Project Architect" is the architect or firm engaged as an independent contractor by the City to design the project.

The authority of the Project Architect to monitor and review the work shall be strictly limited to that authority specified herein, and no additional authority has been granted, nor shall be inferred.

Section 1.19. Function of Project Architect

The Project Architect is the design professional engaged as an independent contractor by the City of Colfax to design the project and to advise the Project Manager in all aspects of the construction phase of the project. His functions include advice and assistance to the Project Manager in the correct interpretation and application of the plans and specifications. However, the Project Manager is the City's representative on the project, not the Project Architect. The Project Architect is not authorized to issue addenda, interpretations, or change orders, or in any other way to bind the City in discussions with the Contractor.

Copies of all correspondence relating to the proper performance of the Contract Documents set from the contractor to the Project Manager shall be delivered as well to the Project Architect. The Project Manager then shall consult with the Project Architect prior to responding to the Contractor's requests.

When discussions between the Contractor and the Project Manager occur either on the site or elsewhere, but the Project Architect is not present, the Project Manager in all cases reserves the right to consult with and obtain the advice of the Project Architect prior to issuing his final opinion or instruction, and to revise any opinions or instructions he may have given prior to such consultation.

Section 1.20. Reference to Codes.

Unless otherwise noted, all references to statutes are to the laws of the State of California as codified in the various specified codes.

Section 1.21. Site.

"Site" is the area within which the project is to be constructed.

Section 1.22. Special Provisions.

The "special provisions" are specific clauses setting forth conditions or requirements peculiar to the work, and supplementary to the general conditions and technical specifications.

Section 1.23. Specifications.

"Specifications" include the City's general conditions, city standard construction specifications, city improvement standards, city standard drawings, the special provisions and technical specifications applicable to this work, all duly executed and issued addenda and interpretations, and all modifications approved by the City pursuant to a change order.

Section 1.24. Subcontractor.

"Subcontractor" shall mean each person or firm who is required by law to be and who is licensed to and will perform work, labor or render services to the prime contractor in or about the construction of the work, or who, under subcontract to the prime contractor, specially fabricates and installs a portion of the work or improvement, in an amount in excess of one-half of one percent (0.5%) of the prime contractor's total bid.

"Subcontractor" shall include all persons or firms within the authority of the Subletting and Subcontracting Fair Practices Act, Chapter 4 of Part 1 of Division 2 of the Public Contracts, commencing with section 4100.

ARTICLE 2. BONDS AND BONDING; INDEMNIFICATION AND INSURANCE.

Section 2.01. Bonds: Time to Submit.

Within ten (10) days after being notified of the award of the contract, and before the City will execute the agreement for construction, the Contractor to whom the work is awarded shall furnish and file with the City bonds as set forth below in sections 2.02 and 2.03.

Section 2.02. Performance Bond.

Contractor shall submit a faithful performance bond on the form provided with the Contract Documents, duly executed by a responsible corporate surety authorized to do business in the State of California and acceptable to City, conditioned upon the faithful performance by the Contractor of all requirements of the Contract Documents. The amount of said bond shall be in a sum no less than one hundred percent (100%) of the total contract price.

Section 2.03. Labor and Materials Payment Bond.

Contractor shall also submit a bond on the form provided with the Contract Documents, duly executed by a responsible corporate surety authorized to do business in the State of California and acceptable to City, which in all respects complies with Civil Code sections 9550-9566, inclusive. This bond, hereinafter referred to as a "payment bond," shall be in a sum no less than one hundred percent (100%) of the contract.

Section 2.04. Warranty and Maintenance Bond.

Prior to final payment as provided in Article 25 herein below, Contractor shall furnish a bond issued by a responsible corporate surety licensed to do business in the State of California securing the performance by Contractor of his obligations undertaken by virtue of the guarantees required by Article 26 herein below. Such bond shall remain in full force and effect for a period no less than one (1) year after the acceptance by City of the work, and shall be in a sum no less than twenty percent (20%) of the total amount of the contract. In lieu of such bond, Contractor may submit a certified or cashier's check, cash or an irrevocable, unconditional letter of credit in a form acceptable to City, to secure performance of Contractor's obligations on the guarantee.

Section 2.05. Indemnification.

To the full extent and period allowed by law, Contractor shall hold harmless, defend, and indemnify the City and its officers, officials, employees, and volunteers from and against all claims, damages, losses and expenses, including attorney fees, arising out of the performance of the work described herein, caused in whole or in part by any negligent act or omission of the Contractor, any subcontractor, anyone directly or indirectly employed by any of them, or anyone for whose acts any of them may be liable, except where caused by the active negligence, sole negligence, or willful misconduct of the City.

The indemnity obligation expressly extends to and includes any and all liability, claims, damages, losses and expenses occasioned as a result of damages to adjacent property caused by the conduct of the work.

The indemnity obligation expressly extends to and includes any and all liability, claims, damages, losses and expenses, occasioned as a result of the violation by Contractor, the Contractor's agents, employees, or independent contractors or subcontractors, of any provisions of federal or state law. The indemnity obligation also expressly extends to and includes any liability, claims, damages, losses and expenses, or any property damage to property owned by any person while on or about the premises of the work or as a result of the work, whether such persons are on or about the premises by right or not, whenever the work is alleged to have been a contributing cause in any degree whatsoever.

Lack of insurance coverage does not negate Contractor's obligation to indemnify City as provided in these Contract Documents. Nothing contained in the foregoing indemnity provisions shall be construed to require the Contractor to indemnify the City in contravention of section 2782 of the Civil Code.

Section 2.06. Indemnification of Adjacent Property Owners.

In the event the Contractor enters any agreement with the owners of any adjacent property to enter upon or adjacent to such property for the purpose of performing this contract, the Contractor shall fully indemnify, defend and save harmless such person, firm, or corporation, state or other governmental agency which owns or has any interest in such adjacent property. The form and content of such indemnification agreement shall be approved by the City prior to commencement of the work on or about such property. Contractor also shall indemnify the City as provided above and in Section 15.03.

Section 2.07. Insurance.

Contractor shall procure and maintain for the time period described below insurance against claims for injuries to persons or damage to property which may arise from or in connection with the performance of work under this contract and the results of that work by Contractor, its agents, representatives, employees, or subcontractors. All coverage available to the Contractor as named insured shall be made available to the City, its officers, employees and volunteers as additional insured. Contractor shall provide to City the full policy limits of Contractor's insurance, with coverage at least as broad as, and shall maintain limits no less than, the following:

A. General Liability. Contractor shall maintain in full force and effect a policy of commercial general liability insurance (ISO occurrence form CG0001) and Owners and Contractors Protective Liability Coverage Form – Coverage for Operations of Designated Contractors (ISO form G0009) with limits no less than the following: one million dollars ($1,000,000) per occurrence for bodily injury, personal injury, and property damage. If a general aggregate limit is used, either the general aggregate limit shall apply separately to this agreement, or the general aggregate limit shall be twice the required occurrence limit. (The occurrence form of policy is required whenever it is available.)

B. Worker's Compensation and Employer's Liability Insurance. Contractor shall fully comply with the law of California concerning worker's compensation. Said compliance shall include, but not be limited to, maintaining in full force and effect one or more policies of insurance insuring against any liability Contractor may have for worker's compensation. Contractor shall also maintain in full force and effect a policy of employer's liability insurance with limits no less than the following: one million dollars ($1,000,000) each accident; one million dollars ($1,000,000) policy limit bodily injury by disease; one million dollars ($1,000,000) each employee bodily injury by disease.

C. Automobile. Contractor shall maintain in full force and effect a policy of commercial automobile liability insurance (ISO Form CA0001 Code 1 (any auto) with limits no less than the following: one million dollars ($1,000,000) per accident for bodily injury and property damage.

D. Course of Construction. Contractor shall maintain in full force and effect a policy of course of construction insurance covering all risks of loss, less policy exclusions, with limits no less than one hundred percent (100%) of the replacement value of any loss, including items of labor and materials in place or to be used as part of the permanent construction, including surplus miscellaneous materials and supplies incident to the work, and such scaffolding, staging, towers, forms and equipment as are used on the work and not otherwise insured, with no coinsurance penalty provisions.

Section 2.08. Insurance; Endorsements.

The required insurance shall contain or be endorsed to contain the following provisions:

A. Added Insureds. The City, its officers, employees and volunteers shall be covered as insureds under the general liability, automobile, and course of construction policies with respect to liability arising out of activities performed by or on behalf of Contractor under this contract. The coverage shall contain no special limitations on the scope of protection afforded to City, its officers, employees and volunteers. Coverage shall not extend to any indemnity coverage for the active negligence of the additional insured in any case where an agreement to indemnify the additional insured would be invalid under subdivision (b) of section 2782 of the Civil Code.

B. Contractor's Insurance Primary. For any claims related to work or operations performed by or on behalf of Contractor, the Contractor's insurance coverage shall be primary insurance as respect to the City, its officers, employees, and volunteers. Any insurance or self-insurance maintained by the City, its officers, employees, or volunteers shall be excess of the Contractor's insurance and shall not contribute with it.

C. Thirty-Day Notice. The insurance coverage shall not be assigned, reduced, amended, cancelled, terminated, or not renewed by either party except after thirty (30) days prior written notice by certified mail, return receipt requested, to City.

D. Subrogation. The worker's compensation insurance carrier shall waive all rights of subrogation against the City, its officers, employees and volunteers, for losses paid under the policy which arise from work performed for the City under this contract.

Section 2.09. Insurance; Other Provisions.

A. The insurance company or companies providing Contractor the coverages required by the Contract Documents shall be admitted in the State of California and have a current A.M. Best's rating of no less than A:VIII or equivalent acceptable to City.

B. Any deductibles or self-insured retentions must be declared to and approved by the City. At the option of City, either: the insurer shall reduce or eliminate such deductibles or self-insured retentions as respects the City, its officers, employees and volunteers; or the Contractor shall provide a financial guarantee satisfactory to City guaranteeing payment of losses and related investigations, claim administration and defense expenses.

C. The insurance shall be maintained at all times during prosecution of the work until sixty (60) days after final completion and acceptance by City if an occurrence policy form is used. If a claims made policy form is used, the following requirements apply:

1. The "Retro Date" must be shown, and must be before the date of the contract or the beginning of contract work.

2. Insurance must be maintained and evidence of insurance must be provided for at least five (5) years after completion of the contract of work.

3. If coverage is cancelled or non-renewed, and not replaced with another claims made policy form with a "Retro Date" prior to the contract effective date, the Contractor must purchase "extended reporting" coverage for a minimum of five (5) years after completion of contract work.

4. The claims reporting period shall, at a minimum, continue for sixty (60) days after final completion and acceptance of the work by the City.

5. A copy of the claims reporting requirements, including the reporting periods applicable to the policy, must be submitted to the City for review.

6. Contractor shall give its insurance carrier and City written notice of each and every event or incident occurring during work being performed under this contract that may ripen into a claim. Notice shall be given no later than ten (10) days after such event or incident.

Section 2.10. Insurance; Failure to Maintain.

If Contractor, for any reason, fails to maintain insurance coverage, the failure shall be deemed a material breach of contract. City, at its sole option, may terminate this contract and obtain damages from Contractor resulting from the breach. Alternatively, City may purchase the required insurance coverage, and without further notice to Contractor, City may deduct from the sums due to Contractor any premium costs advanced by City for the insurance.

Section 2.11. Insurance; Subcontractors.

Contractor shall require and verify that all subcontractors maintain insurance meeting all the requirements stated herein, and Contractor shall ensure that City is an additional insured on insurance required from subcontractors. For CGL coverage subcontractors shall provide coverage with a format at least as broad as CG 20 38 0413.

Section 2.12. Insurance; Certificates and Endorsements.

Contractor shall furnish City with original certificates and amendatory endorsements, or copies of the applicable insurance language, effecting coverage required by this contract. All certificates and endorsements are to be received and approved by the City before work commences. However, failure to obtain the required documents prior to the work beginning shall not waive the Contractor's obligation to provide them. The City reserves the right to require complete, certified copies of all required insurance policies, including endorsements, required by these specifications, at any time.

Contractor shall replace certificates of insurance for policies expiring prior to completion of the work under the contract, and shall continue to furnish certificates for five years beyond the contract terminate date, when the Contractor has a claims made form of insurance.

Section 2.13. Worker's Compensation; Certificate; Posting.

Contractor shall sign and file with the City the following certificate on the form provided by the City:

> I am aware of the provisions of section 3700 of the Labor Code which require every employer to be insured against liability for worker's compensation or to undertake self-insurance in accordance with the provisions of that Code, and I will comply with such provisions before commencing the performance of the work of this contract.

Contractor shall require each subcontractor to file such statement with him prior to allowing that subcontractor to commence work.

If there is any employee working on the project who is not protected under the Worker's Compensation statute for any reason, including because engaged in hazardous work, Contractor shall provide, and shall cause each subcontractor to provide, adequate insurance for the protection of such employee.

Contractor shall post, and cause all subcontractors to post, in a conspicuous place on the project site, a statement as required by Labor Code section 3550, stating the name of the compensation insurance carrier or that the employer is self-insured, and who is responsible for claims adjustment. Said notice shall also include advice as to an injured employee's right to receive medical care, to select or change the treating physician pursuant to the provisions of Labor Code section 4600, and the right to receive temporary disability indemnity, permanent disability indemnity, vocational rehabilitation services, and death benefits, as appropriate. Contractor and all subcontractors shall also give every new employee, either at the time the employee is

hired or by the end of the first pay period, written notice of the information contained in Labor Code section 3550.

ARTICLE 3. TIME OF WORK.

Section 3.01. Schedule of Work and Cost Breakdown.

No later than thirty-five (35) days after execution of the agreement for construction or such other time as may be set forth in the special provisions, and before commencement of work, Contractor shall furnish to the Project Manager a schedule showing the estimated dates on which he will start each part or class of the work, the contemplated dates for completing such parts or classes, the days and hours proposed for work, and the approximate percentage of work scheduled for completion at any time. When requested by the Project Manager, Contractor shall also submit supplemental progress schedules from time to time during the progress of the work. The separate parts or classes shall be those specified by the Project Manager.

The progress schedule shall be practicable and consistent with the time requirements of the agreement.

Simultaneously with the progress schedule, Contractor shall furnish to the Project Manager a detailed estimate giving a complete breakdown of the contract price with reference to the parts or classes of work shown on the progress schedule.

The Contractor shall, to the fullest extent reasonable, carry on the work of construction of the various classes or parts of the project concurrently, and shall not defer construction of any portion of the work in favor of any other portion of the work, without the express approval of the Project Manager.

Section 3.02. List of Materials and Schedule of Unavailable Materials.

Within thirty-five (35) days after execution of the Contract Documents, or such other time as may be set forth in the special provisions, and before commencement of the work, Contractor shall submit to the Project Manager a complete list of all materials proposed for use in the work, whether or not mentioned in the specifications. Contractor shall specify any items which differ in any respect from materials specified.

This list shall include all materials which are proposed by the subcontractors as well as by the Contractor for use in the work.

This list shall include the cost quotations received for the materials specified, together with the cost quotations of any proposed substitution.

This list shall also specify the proposed delivery dates of all materials.

When this list of materials is submitted, Contractor shall also submit a schedule of any materials called for in the specifications that are not obtainable for installation in the project within the time limits set forth in the progress schedule. Failure to indicate such material on this schedule will be deemed sufficient cause for the denial of any request by Contractor for an extension of the contract time because of the unavailability of any materials. The schedule shall detail Contractor's efforts to obtain the materials in question and suggest substitutions pursuant to Article 7.

Section 3.03. Approval of Progress Schedule and Materials List.

Prior to commencing work, the Contractor shall secure the approval of the Project Manager of the progress schedule and materials list set forth above. The Project Manager may modify either consistently with the requirements of this agreement.

Once approved, both the progress schedule and the materials list shall be incorporated as part of the agreement and Contractor shall comply therewith.

Failure to meet the approved progress schedule is grounds for termination of the contract, pursuant to Article 27.

Section 3.04. Commencement of Work.

Contractor shall not commence nor allow any subcontractor to commence work before receiving a notice to proceed from the City, specifying the day work is to commence. Contractor shall commence work on such day, and shall prosecute the work diligently to completion thereafter.

Section 3.05. Time of Essence.

Time is of the essence of this agreement.

Section 3.06. Date of Completion.

Contractor obligates himself to make the whole work complete and satisfactory on or before the completion date specified in section 2 of the agreement for construction, plus any time extensions approved by change order. The date of completion is the date of recordation of the Notice of Completion pursuant to section 25.05 herein; provided that the date of completion shall be deemed to be the date the Contractor filed the "Contractor's Request for Final Payment" pursuant to section 25.01, if, and only if, the work was in fact complete and in full conformity with the Contract Documents when Contractor's request was filed.

Section 3.07. Extensions of Time; Unavoidable Delays.

The Contractor shall not be granted an extension of time except on the issuance of a change order by the Director of Public Services, upon a finding of good cause for such extension. Good cause for a time extension shall include only the following:

A. That materials or articles called for in the specifications are not obtainable form any source within a reasonable reach from the work, considering the material in question, within the time limits specified in the contract and that such materials or articles were listed by the Contractor in the list required by section 3.02 hereinabove; that the unavailability of the materials is in fact the cause for the delay, and could not have been cured by adjusting the progress schedule; and that the Project Manager certifies that the unavailability of such articles or materials are due to circumstances beyond the Contractor's control, not including the financial condition or unavailability of credit to the Contractor.

B. That delays in construction have resulted from circumstances beyond the control of the Contractor and which the Contractor could not have provided against by the exercise of reasonable care, prudence, foresight, and diligence. Unavoidable delays within the meaning of this subparagraph shall be those caused by the acts or neglect of the City or its officers, agents or employees; by acts of God; war, insurrection, civil disorder, fire, floods, epidemics, or strikes.

Delays in the prosecution of parts or classes of the work which may in themselves be unavoidable but do not necessarily prevent or delay the prosecution of other parts or classes of the work nor the completion of the whole work within the time specified are not unavoidable delays for purposes of this subparagraph.

C. That an extension of time may be granted due to weather which is unsuitable for the work currently in progress, upon a finding that the weather conditions in fact make it impossible for the work to proceed and upon the further finding that such weather conditions were not, and could not in the exercise of reasonable diligence, have been foreseen by the Contractor. Typical weather that should, in the exercise of reasonable foresight and diligence, be expected in the area at the time of year in question is not cause for an extension of time.

In all cases, the time authorized for extension shall be no greater than the number of days directly attributable to the good cause for the extension.

Section 3.08. Notice of Delays.

Whenever the Contractor foresees any delay in the prosecution of the work, and in any event immediately upon the occurrence of any delay which the Contractor regards as good cause for an extension, Contractor shall notify the Project Manager in

writing of the delay. Such notification shall specify with detail the cause asserted by the Contractor to constitute good cause for an extension. Failure of the Contractor to submit such a notice within seven (7) days after the initial occurrence of the event giving rise to the delay shall constitute a waiver by Contractor of any request for extension, and no extension shall be granted as a consequence of such delay.

Section 3.08.05. Change Order No Basis for Delay Claim.

Contractor and City agree the City's exercise of its rights to order changes in the work, regardless of the extent and number of changes, or to suspend the work, is within the contemplation of the parties and shall not be the basis for any claim for compensable delay. The rights of the Contractor to adjustments of the contract time and the contract sum, based on the changes in the work or suspension of the work, shall be governed solely by the provisions of Section 3.07 and 3.10 of these General Conditions

Section 3.09. Investigation; Procedure.

Upon receipt of a request for extension of time, the Project Manager shall conduct an investigation of the facts asserted by the Contractor to constitute good cause for an extension. The results of this investigation shall be reported by the Project Manager to the Contractor and the Project Manager shall indicate whether he will recommend for or against such extension to the Director of Public Services.

Contractor agrees that the determination of the Director of Public Services as to whether good cause for an extension exists, and, if so, the duration of the extension, shall be final and binding upon both City and Contractor.

Section 3.10. Discretionary Time Extensions for Best Interest of City.

The City reserves the right to extend the time for completion of the work if the Director of Public Services determines that such extension is in the best interest of the City.

In the event that such discretionary extension is made at the request of the Contractor, the City shall have the right to charge to the Contractor all or any part, as the Director of Public Services may deem proper, of the actual cost of engineering, inspection, supervision, incidental and other overhead expenses that accrue during the period of such extension, and to deduct all or any portion of such amount from the final payment for the work.

In the event such extension is ordered over the objection of Contractor, and the decision rests solely with the Director of Public Services and is not legally compelled for any cause, the Contractor shall be entitled to a change order adjusting the price paid to

reflect the actual costs incurred by the Contractor as a direct result of the delay, upon his written application therefor, accompanied with such verification of costs as the Project Manager requires.

Section 3.11. Liquidated Damages.

If the work is not completed by Contractor in the time specified in section 2 of the agreement for construction, or within any period of extension authorized pursuant to this article, or pursuant to a duly issued change order, Contractor acknowledges and admits that the City will suffer damage, and that it is impracticable and infeasible to fix the amount of actual damages. Therefore, it is agreed by and between the Contractor and the City that the Contractor shall pay to the City as fixed and liquidated damages, and not as a penalty, the sum specified in the Special Provisions for each calendar day of delay until the work is completed and accepted, and that both Contractor and Contractor's surety shall be liable for the total amount thereof, and that City may deduct said sums from any monies due or that may become due to Contractor.

This liquidated damages provision shall apply to all delays of any nature whatsoever, save and except only delays found by the Director of Public Services to be unavoidable pursuant to section 3.07 hereinabove, or time extensions granted by the City Council pursuant to section 3.10 hereinabove.

Payment by the City of any progress payments after the specified date of completion shall not constitute a waiver by the City of its right to claim liquidated damages in accordance with this section.

Section 3.12. Extension of Time Not a Waiver.

Any extension of time granted Contractor pursuant to this article shall not constitute a waiver by the City, nor a release of the Contractor from his obligations to perform this contract in the time specified by the agreement, as modified by the particular extension in question.

Granting of a time extension due to one circumstance on one request therefor shall not constitute a granting by the City of an extension of time for any other circumstance or the same circumstance occurring at some other time, and shall not be viewed by Contractor as a precedent for any other request for extension.

Section 3.13. Suspensions Exceeding One Year.

Should the work of this contract be suspended for a period exceeding one calendar year due to war conditions, labor conditions, legal actions, or for other conditions constituting the legal defense of impossibility of performance, Contractor

and City agree to enter into an agreement terminating the agreement upon the following terms and conditions.

City shall be responsible only to pay Contractor the actual value of the work performed from the date of the commencement of the work or from the date of the last progress payment, whichever is later, plus the ten percent (10%) withholds from such progress payments, less any deductions authorized by the Contract Documents.

As between the Contractor and City, it shall be conclusively presumed that the actual value for Contractor's work to the date of the last progress payment is no more than the actual amount of that progress payment plus the ten percent (10%) withhold from such progress payment; provided, however, that this section shall not preclude City from deducting charges from work or materials which do not meet the requirements of the Contract Documents.

Section 3.14. Effect of Stop Work Notice.

If the City orders a suspension of the work pursuant to Article 18, the days on which the suspension is in effect shall be included in determining the required completion date, and shall not otherwise modify or extend the time within which Contractor is to perform. In such event, Contractor shall not be entitled to any damages or compensation on account of such suspension or delay.

ARTICLE 4. INTERPRETATION OF DRAWINGS AND SPECIFICATIONS.

Section 4.01. Sections of Drawings and Specifications.

For convenience, the specifications and drawings in the Contract Documents are arranged in several sections, but such separation shall not be considered as the limits of the work required of any separate trade. The terms and conditions of the work to be performed by any subcontractor are strictly between the Contractor and such subcontractor.

Section 4.02. Coordination of Drawings, Specifications, and Work.

Scale drawings, full-size details, and specifications are intended to be fully coordinated and to agree. Any work called for by the drawings, but not mentioned in the specifications, or vice versa, is to be furnished as though fully set forth in both documents. Where not specifically stated otherwise, all work and materials necessary for each unit of construction, even though only briefly mentioned or indicated, shall be furnished and installed fully and completely, including, but not limited to, the manufacturer's instructions and/or recommendations, as part of this contract.

Drawings showing the locations of equipment, wiring, piping, etc. are diagrammatic, and conditions will not always permit their installation in the location shown. In such event, Contractor shall notify the Project Manager and obtain an interpretation before proceeding with the work in question.

Section 4.03. Interpretation and Additional Instructions.

A. Notification by Contractor. Should the Contractor discover any conflicts, omissions, or errors in the Contract Documents, or have any question concerning interpretation or clarification of the Contract Documents, or if it appears to him that the work to be done or any matters relative thereto are not sufficiently detailed or explained in the Contract Documents, then before proceeding with the work affected he immediately shall notify the Project Manager in writing and request interpretation, clarification, or furnishing of additional detailed instructions and/or drawings concerning the work. All such questions shall be resolved and instructions to the Contractor issued within a reasonable time by the Project Manager, whose decision shall be final and binding.

Should the Contractor proceed with the work affected before receipt of instructions from the Project Manager, he shall remove and replace or adjust any work which is not in accordance therewith, and he shall be responsible for any resultant damage, defect, or added cost.

In the event of a failure to agree as to the scope of the contract requirements, the Contractor shall follow the procedure set forth in section 4.04 herein below.

B. Additional Detailed Instructions. At any time, the Project Manager may furnish additional detailed written instructions to explain the work more fully, and such instructions shall be a part of the contract requirements.

Section 4.04. Dispute as to Contract Requirements.

When the Contractor and the Project Manager fail to agree as to whether or not any work is within the scope of the Contract Documents, the Contractor shall nevertheless immediately perform such work upon receipt of the Project Manager's written order to do so. Within seven (7) calendar days after receipt of such order, the Contractor may submit a written protest to the Project Manager specifying in detail in what particulars the contract requirements were exceeded and the change in cost resulting therefrom. Failure to submit such protest within the period specified shall constitute a waiver of any and all right to adjustment in the contract price and the completion date due to such work, and the Contractor thereafter shall not be entitled to any adjustment of the contract price or time therefor.

The decision of the Project Manager shall be made within seven (7) days after receipt of the protest and shall be in writing. If the Contractor disagrees with the decision of the Project Manager, the Contractor may file a Notice of Potential Claim pursuant to Section 28.05 of this contract.

The time during which the protest is pending shall not be deducted from the time of completion of the contract.

Section 4.05. Supplemental Drawings.

In addition to the drawings incorporated in the Contract Documents, the Project Manager may furnish such supplemental drawings or instructions from time to time as may be necessary to make clear or to define in greater detail the intent of the contract drawings and specifications. In furnishing such additional drawings, the Project Manager shall have the authority to make minor changes in the work, not involving any extra cost, and not inconsistent with the overall design of the project. These supplemental drawings and instructions shall become a part of the Contract Documents, and the Contractor shall make his work conform to them.

The provisions of section 4.02 through 4.04, inclusive, shall apply to such supplemental drawings and instructions.

Section 4.06. Contractor's As-Built Drawings.

Contractor shall be provided one extra set of working plans and specifications which Contractor shall keep at the site of the work at all times. The following information shall be inserted and dimensioned on said drawings and specifications, in RED, by the Contractor: the exact location of all installations in their finished condition, including all structural, electrical, plumbing and mechanical installations; all changes in construction, materials and installed equipment; adequate dimensional data, both horizontal and vertical, to allow location of covered installations; the identification of changes authorized by change order, and the number of that change order. Upon completion of the work, said drawings and specifications shall be returned to the Project Manager.

ARTICLE 5. SHOP DRAWINGS AND MANUFACTURERS' INSTRUCTIONS.

Section 5.01. Shop Drawings and Manufacturers' Instructions.

The Contractor, at his sole cost and expense, shall furnish to the Project Manager and/or Project Architect such drawings and other descriptive material as are required by the specifications, requested by the Project Manager, or which the Contractor proposes to use in performing the work. Such shop drawings shall be done with sufficient detail to adequately describe items proposed to be furnished or methods of installation to

enable the City and Project Architects to determine compliance with the specifications and with the design and arrangement shown on the working drawings.

Contractor shall also submit copies of all manufacturers' instructions required by the specifications or requested by the Project Manager.

Such submittals shall be checked and coordinated with the work of all trades involved before they are submitted.

Section 5.02. Submission of Shop Drawings.

The Contractor shall submit no less than six (6) copies of all shop drawings or manufacturers' instructions, accompanied by a letter of transmittal, to the Project Architect, listing the identifying number of the drawings submitted and cross-referencing them to the page or sheet in the specifications and/or working drawings to which they are related. One additional copy shall be delivered to the Project Manager.

All submissions must be marked with the name of the project and the name of the Contractor and shall be numbered consecutively and complete in every respect.

The Project Manager shall not accept shop drawings or manufactures' instructions which are not sufficiently dimensioned and detailed to demonstrate compliance with the Contract Documents.

The drawings and instructions shall be submitted promptly, so as to cause no delay in the work. The drawings and instructions shall be submitted so as to allow the Project and Project Managers a review period of no less than seven (7) days.

Section 5.03. Approval of Shop Drawings.

Contractor shall not proceed with the work as shown on the shop drawings or manufacturers' instructions until he is notified by the Project Manager that they have been approved.

Thereafter, the work shall proceed in accordance with the approved shop drawings or manufacturers' instructions, including any modifications thereto approved by the Project Manager.

Should the Contractor proceed with the work shown thereon before approval is received, he shall remove and replace or adjust any work which is not in accordance with the approved shop drawings or manufacturers' instructions, and he shall be responsible for any resultant damage, defect, or added cost.

When requested by the Project Manager, the Contractor shall resubmit shop drawings and manufacturers' instructions for reexamination and approval or disapproval.

Section 5.04. Shop Drawings Showing Variation from Contract.

It shall be the responsibility of the Contractor to specifically point out any variation or discrepancy between the shop drawings or manufacturers' instructions he submits and the Contract Documents.

Contractor shall make specific mention of all such variations, along with an explanation of why they are requested, in his letter of transmittal.

Failure by the Contractor to identify in his letter of transmittal any variation, discrepancy, or conflict with the contract drawings shall render the approval null and void, and Contractor shall bear all risk of loss and reconstruction costs or delays.

If any plumbing, mechanical, electrical, or structural modifications are required as a result of the approval of shop drawings or manufacturers' instructions which do not comply with the Contract Documents, such modifications shall be made without extra cost to the City, and without extension of the time specified for completion of the work.

Section 5.05. Effect of Approval of Shop Drawings.

The approval of shop drawings or other descriptive material shall not relieve the Contractor of any obligation for accuracy of dimensions and details; for conforming the work to the requirements of the Contract Documents; or from responsibility to fulfill the contract at no extra cost to the City, within the completion time.

ARTICLE 6. MATERIALS AND PRODUCTS.

Section 6.01. Quality of Materials and Products.

Contractor shall, if required by the Project Manager, furnish satisfactory evidence as to the kind and quality of materials provided.

The Project Manager may require, and the Contractor shall submit, a list designating the source of supply of each item of materials entering into the construction of the work, and in such event, such materials or products shall not be delivered to the work nor installed therein until after the Project Manager has approved such list.

Section 6.02. Better Material or Process.

In the event that Contractor furnishes a material, product, process, or article better than that specified in the Contract Documents, the difference in cost of such material, product, process, or article shall be borne by the Contractor.

Section 6.03. Industry Standards.

A. Any material specified by reference to the number, symbol, or title of a specified standard such as a Commercial Standard, a Federal Specification, a Trade Association Standard, or other similar standard, shall comply with the requirements in the latest revision thereof, including any amendments or supplements thereto, in effect on the date of the Bid Form, except as limited to type, class, or grade, or modified in such reference.

B. The standard referred to, except as modified in the specifications, shall have full force and effect as though printed in these specifications. These standards are not furnished to the bidder for the reason that the manufacturers and trades involved are assumed to be familiar with their requirements.

1. Where Federal Specifications are referred to as a measure of quality and standard, they refer to Federal Specifications established by the Procurement Division of the United States Government and are available from the Superintendent of Documents, U.S. Government Printing Office.

2. Where Federal Specification numbers are used, they refer to the latest edition including amendments thereto.

3. Where Commercial Standards (CS) or Product Standards (PS) are referred to as a measure of quality, standard, and method of fabrication, they refer to Commercial Standards and Product Standards issued by the U.S. Department of Commerce.

4. Where ASTM serial numbers are used, they refer to the latest tentative specifications, standard specifications, standard method or standard methods of testing, issued by the American Society for Testing Materials, unless specifically noted.

Section 6.04. Materials and Products Storage.

Materials, product and equipment storage is prohibited within the public right of way unless otherwise approved by the Project Manager. Contractor shall confine the storage of all materials, products, and equipment required in the performance of this

contract to the areas specified by the Project Manager. Contractor shall obtain prior approval from the Project Manager regarding areas for storage and methods of protection. All material, products, and equipment shall be brought and used upon the premises in such manner as to leave driveways and parking areas clear for the regular use of the public and City employees.

Section 6.05. Original Packages or Containers; Labels.

All materials delivered to the site shall be new, unless otherwise specified, of the type, capacity, and quality specified, and free from defects. All materials shall remain in their original packages or containers until ready for use. The labels of all packages or containers shall remain affixed, and kept legible. No product shall be stored in any container, the label of which does not accurately describe the contents of the container.

Section 6.06. Protection of Materials and Equipment.

Contractor shall protect the work, materials, and equipment from damage due to the action of the elements, trespassers, or other causes. He shall properly store materials and equipment and, when necessary, erect such temporary structures as are required to protect them from damage.

Section 6.07. Providing and Paying for Materials.

Except as otherwise specifically stated in the Contract Documents, Contractor shall provide and pay for all materials, products, articles, processes, labor, tools, equipment, and installation, and all associated superintendence of every nature whatsoever necessary to execute and complete the work within the specified time.

Section 6.08. Warranty of Title.

No material, article, product, supplies, or equipment for the work under this agreement shall be subject to any chattel mortgage, or a conditional sale or other agreement by which an interest therein or in any part thereof is retained by the seller or supplier.

Contractor warrants good and sufficient title to all material, supplies, and equipment installed or incorporated in the work, and agrees upon completion of the work to deliver the premises together with all improvements and appurtenances, constructed or placed thereon by him, to City, free from any claims, liens, or charges.

Contractor agrees that neither he nor any person, firm, or corporation furnishing any materials or labor for any work covered by this contract shall have any right to a lien upon the premises or any improvement or appurtenances thereon; provided, however, that nothing contained in this section shall defeat or impair the rights of persons

furnishing materials or labor under the payment bond given by Contractor, nor any rights under any law permitting such persons to look to funds due to Contractor but retained by City.

Contractor shall cause the provisions of this section to be inserted in all subcontracts and material contracts executed by Contractor and notice of this provision shall be given to all persons furnishing materials for the work.

This section shall not disallow Contractor's installing any devices or equipment of utility companies or of governmental agencies, the title to which is commonly retained by the utility company or the agency.

Section 6.09. Patents and Royalties.

All fees, claims, or royalties for any patented or copyrighted invention, article, arrangement, or plan that may be used upon or in any manner connected with the doing of the work or any part thereof shall be included in the price bid for doing the work. Contractor and his sureties shall protect and hold harmless the City and all of its officers, agents, and employees against any and all suits, demands, claims or causes of action brought or made by the holder of any invention, patent, copyright, or trademark, or arising from, any alleged infringement of any invention, patent, copyright, or trademark.

Before final payment is made on account of this contract, Contractor shall furnish acceptable proof to the City of proper release from all such fees or claims.

Section 6.10. Payment of Federal or State Taxes.

Any federal, state or local tax, specifically including sales and use taxes, payable on materials furnished by Contractor pursuant to the contract, shall be included in the contract price and paid by the Contractor.

The City shall furnish the Contractor with a certificate, on forms provided by the Contractor, to the effect that items furnished pursuant to this contract are for the exclusive use of the City.

ARTICLE 7. SUBSTITUTIONS AND APPROVALS.

Section 7.01. Drawings and/or Other Data.

Contractor may make proposals for substitutions to the working drawings and/or specifications. All such proposals shall be in writing, and shall be accompanied by drawings and/or other data, including cost data of the proposed substitutions, and all information required by the Project Manager to make a fair evaluation of the

Contractor's request. It is the intent of this article to comply with Public Contract Code section 3400.

Section 7.02. Equal Materials; Substitutions.

Whenever in the Contract Documents any materials, products, processes, or articles are indicated or specified by the name brand of the manufacturer, or by patent or proprietary names, such specifications shall be deemed to be a measure of quality and utility or a standard, and shall be deemed to be followed by the words, "or equal".

If the Contractor desires to use any other brand or manufacturer of equal quality and utility to that specified, he shall make application to the Project Manager in writing and shall submit samples, if requested.

The Project Manager then will determine whether or not the proposed substitution is equal in quality and utility to the material specified, and his decision shall be final.

Requests for substitutions in materials will only be considered when offered by the Contractor as required by this article, and no deviations from the specifications will be allowed unless such substitutions have the prior written approval of the Project Manager.

Section 7.03. Effect of Allowance.

If the Project Manager allows the substitution, the Contractor shall be solely and directly responsible for setting approved substituted materials and/or equipment into the available space, and for the proper operation of the substituted equipment with all other equipment with which it may be associated, all in a manner acceptable to the City.

No time extensions shall be granted on account of a substitution. The contract price shall be adjusted by the price difference between the approved substitution and the originally specified item.

Section 7.04. Time for Proposing Substitutions; Decision.

All requests for substitutions shall be made within thirty-five (35) days from the date of the award of the contract. Failure to meet said time period shall constitute a waiver by Contractor and an acceptance of the specified materials. Late submittals may be considered only when the Project Manager consents in writing, and the City's best interests so require.

The Project Manager shall evaluate said request, and shall approve, deny, approve with conditions, or initiate the procedure for a change order in response to Contractor's request. If the proposed substitution is rejected, Contractor shall provide the material originally specified. The decision of the Project Manager shall be final.

The Contractor shall bear the burden of proof that his proposed substitutions are of equal quality and performance to the originally designated material or specification.

Failure by Contractor to identify all deviations from the Contract Documents in his request for substitution shall render any City action taken thereon null and void. Contractor shall bear all costs resulting from any error in the request for substitution.

Section 7.05. Samples and Testing of Proposed Substitutions; Costs of Adapting to Work.

When the Project Manager determines that samples and testing are required to decide a request for a substitution, he shall so advise the Contractor, and specify the materials or work to be sampled. Contractor shall, at no cost to the City, provide such samples as required by Article 8, dealing with samples and testing.

Contractor shall bear all costs of sampling and testing required to decide a request for substitution, and if a substitution is accepted, Contractor shall bear all costs associated therewith, including the cost of architect's and/or engineer's services required to adapt the substitution to the design to the complete satisfaction of the City, and all costs of mechanical, electrical, structural, or other changes needed to adapt the substitution to the work.

ARTICLE 8. SAMPLES AND TESTING.

Section 8.01. Materials and Work Which Must be Tested; Contractor's Expense.

Materials and/or work which require sampling and/or testing are specified in the Contract Documents. The Contractor shall bear the full cost of providing samples and all testing of such materials and/or work.

Section 8.02. Materials Which May be Tested.

The City reserves the right to require Contractor to provide samples, and to perform tests on any materials, articles, equipment, installations, or construction performed by Contractor in addition to those specified in the Contract Documents. The City shall assume the cost of sampling and testing materials only when the Contract Documents do not require the Contractor to do so. In such event, City may, if appropriate, issue a change order.

Section 8.03. Testing.

All tests shall be performed under the supervision of the testing laboratory or consultant employed by the City during regular working hours.

Section 8.04. Selection of Samples.

All samples and specimens for testing shall be selected by the Project Manager or by the testing laboratory, but not by the Contractor.

Section 8.05. Delivery of Samples.

The Contractor shall, at his sole cost and expense, furnish, package, mark, and deliver all samples to be tested at locations other than the site. Such samples shall be delivered either to the City or to the testing laboratory or such other address specified by the Project Manager.

Delivery of all samples to the testing laboratory shall be made in ample time to allow the test to be made without delaying construction. No extra time will be allowed for the completion of the work by reason of delay in testing samples required by the Contract Documents or due to Contractor's request for substitution.

Contractor shall allow free access at all times to the representatives of the testing laboratory to the site of the work, and shall point out the sources from which samples are taken.

All test reports shall be sent to all parties specified by the City.

Section 8.06. Approval of Samples.

No materials or work of which samples and/or tests are required shall be used or covered until the Project Manager approves such samples and/or tests. If contractor installs, uses, or covers any such material, article, or work prior to testing and approval, such shall be at Contractor's sole risk and expense, and he shall bear all costs of uncovering, repair, and replacement thereof.

The approval of any samples shall be for the characteristics thereof, or for the uses named in such approvals, and no other.

No approval of any samples shall be deemed a change or modification in any requirement of the Contract Documents.

Upon testing of any sample of material or work, no additional sample shall be considered unless approved by the Project Manager.

All material or work installed after the sampling and testing is performed and approved shall be equal to or better than the approved sample in all respects.

Section 8.07. Damage Due to Testing.

Contractor shall, at his sole cost and expense, repair all damage resulting from testing specified in the Contract Documents. The City shall issue a change order for repair of damage due to sampling or testing other than specified in the Contract Documents.

The Contractor shall not make any tests upon portions of the building already completed, except with the prior written consent and under the direction and control of the Project Manager.

Section 8.08. Retesting.

If as a result of any test, whether originally specified or not, any material or work is found to be unacceptable, it shall be rejected, and all further sampling and testing required by the City shall be at Contractor's expense.

Section 8.09. Effect of Sampling and Testing.

The City assumes no obligation, and the Contractor shall be relieved of no obligation undertaken pursuant to the Contract Documents by virtue of sampling and testing specified in this article.

The responsibility for incorporating satisfactory materials and workmanship which meet the Contract Documents in the work rest entirely with the Contractor, notwithstanding any prior samples or tests.

ARTICLE 9. REJECTION AND REPLACEMENT OF WORK AND MATERIALS.

Section 9.01. Rejection of Materials and Workmanship.

The City shall have the right to reject materials and workmanship which are determined by the Project Manager to be defective or fail to comply with the Contract Documents.

Rejected workmanship shall be corrected satisfactorily, and rejected materials shall be removed from the premises and replaced, all without cost to the City.

If the Contractor does not correct such rejected work and/or materials within a reasonable time, fixed by the Project Manager in a written notice to Contractor, the City may correct the same and charge the expense to the Contractor, and deduct such expense from the next progress payment otherwise payable to Contractor.

If the City determines that it is in its best interest not to correct defective workmanship and/or materials, or work not done in accordance with the Contract Documents, the Contractor agrees that an equitable deduction from the contract price shall be made therefor, and deducted from the next progress payment.

Section 9.02. Removal of Rejected Materials.

Contractor promptly shall remove from the site all materials which have been rejected.

Section 9.03. Failure to Remove Unsatisfactory Materials.

If the Contractor does not remove materials which have been determined not to comply with the Contract Documents within a reasonable time, fixed by the written notice from the Project Manager, the City may remove such materials and may store the materials, all at the expense of Contractor. Contractor shall also bear the cost of replacement of any work damaged due to the removal of materials pursuant to this section.

Any materials removed and stored pursuant to this section shall remain the property and the responsibility of the Contractor, and it is the Contractor's obligation to dispose of such materials. Such materials shall not again be brought upon the site.

The Contractor shall submit to the Project Manager a statement of the source of supply for any such materials. The Project Manager thereupon shall notify such source that the specified materials have not been incorporated into the project, and no claim or stop notice therefor will be recognized. The Contractor shall fully indemnify the City for any claims, costs, or demands, made by any materialman regarding such materials.

The City reserves the right to satisfy any such materialman's claims by paying the same, and deducting the cost from the next progress payment.

ARTICLE 10. SUPERVISION AND LABOR.

Section 10.01. Skilled Labor.

All labor shall be especially skilled for the kind of work required, shall be conducted under the direction of a competent foreman, and workmanship shall be of the highest quality and finish in all respects.

Section 10.02. No Tenancy.

All workers, contractors, or contractors' representatives are admitted to the site only for the proper execution of the work, and have no tenancy.

Section 10.03. Dismissal of Unsatisfactory Employees.

All employees engaged in the work will be considered employees of the Contractor.

The Contractor shall discharge, or cause a subcontractor to discharge, any incompetent employee, or any employee not skilled for the type of work required.

Section 10.04. Personal Attention and Superintendent; Contractor's Agent.

The Contractor shall supervise the work to the end that it shall be faithfully prosecuted.

The Contractor shall at all times keep a superintendent who is fully empowered to act as agent for the Contractor on the site or available by telephone and within a reasonable distance. Contractor shall advise the City in writing of his agent, and of any limitations on his authority to act on behalf of the Contractor. The Contractor shall be responsible for the faithful observation of all instructions delivered to him or his authorized agent(s).

Any instruction issued by the Project Manager not otherwise required by the specifications to be in writing will, upon the request of the Contractor, be confirmed by the Project Manager in writing. All written instructions shall be deemed incorporated as part of this agreement.

Section 10.05. Inspection of the Work of Other Contractors.

It shall be the duty of the Contractor and all subcontractors, before beginning any work, to examine all construction and work of other contractors and/or subcontractors that may affect their work, and to satisfy themselves that everything is in proper condition to receive such work. The Contractor shall notify the Project Manager in writing of any discrepancies or conditions which do not meet this section. Failure on the part of the Contractor to so notify the Project Manager shall constitute an acceptance by the Contractor and all subcontractors of all construction in place as being suitable in all respects to receive further work by the Contractor or such subcontractors.

ARTICLE 11. SUBCONTRACTORS; LISTING AND BID; SUBSTITUTION.

Section 11.01. Subcontracting.

If Contractor shall subcontract any of the work to be performed pursuant to this agreement, Contractor shall be as fully responsible to the City for the acts and/or omissions of such subcontractor and of the persons either directly or indirectly employed or engaged as subcontractors by such subcontractor as he is for the acts and omissions of himself and persons employed by him.

Nothing contained in this agreement shall create any contractual relationship between any subcontractor and the City of Colfax.

Contractor shall bind every subcontractor, and every subcontractor of a subcontractor, by the terms of this contract which are applicable to the work to be performed by such subcontractor.

Section 11.02. Disputes Between Subcontractors and/or Contractor.

If, through acts or neglect on the part of the Contractor, including failure to supervise and control his subcontractors, any other contractor, subcontractor, or worker shall suffer loss or damage on the work, Contractor agrees to settle with such other contractor, subcontractor, or worker by agreement or arbitration, if such other contractor, subcontractor, or worker shall assert any claim against the City of Colfax or any of its officers, agents, or employees, on account of any damage alleged to have been so sustained.

In the event of the receipt of any such claim, the City shall notify the Contractor, who shall defend, indemnify, and save harmless the City and all of its officers, agents, and employees against any such claim.

The City shall not entertain any request for, nor engage in, arbitration or dispute resolution between subcontractors, subcontractors and the Contractor, nor the employees of either; provided, however, that in the event of any such dispute, the disputing parties shall all provide complete written explanations of all facts underlying such dispute on the request of the Project Manager; and provided further that the Project Manager, in his sole discretion, may be present at or call any meetings between the disputing parties.

Section 11.03. Listing of Subcontractors.

Contractor shall comply with the requirements in the instructions to bidders regarding the listing of subcontractors and shall comply with the requirements of the

Subletting and Subcontracting Fair Practices Act, Chapter 4 of Part 1 of Division 2 of the Public Contracts Code, commencing with section 4100, forbidding bid shopping and bid peddling and requiring accurate listing of all subcontractors.

Should the Contractor violate any of the provisions of that chapter, such violation shall be deemed a breach of this contract and the City shall have all remedies provided by California law, including but not limited to those provided in Public Contracts Code section 4110, allowing termination of the contract or penalty assessment of ten percent (10%) of the subcontract.

Section 11.04. Dealings with Subcontractors.

The City will deal only with the Contractor, and the Contractor shall be responsible for the proper execution of the work. Any and all discussions between any subcontractor and the City shall be initiated through, and conducted in the presence of, the Contractor or his representative.

Section 11.05. Termination of Unsatisfactory Subcontractors.

When any portion of the work that has been subcontracted by the Contractor is not being prosecuted in a satisfactory manner, the Contractor shall terminate the subcontract for such work.

Any such subcontractor which is discharged shall not again be employed on the project.

Any termination of a subcontractor pursuant to this section shall be in strict conformity with the requirements of the Subletting and Subcontracting Fair Practices Act, Chapter 4 of Part 1 of Division 2 of the Public Contracts Code, commencing with section 4100.

ARTICLE 12. STATE REQUIREMENTS REGARDING WAGES, HOURS AND EQUAL OPPORTUNITY.

Section 12.01. Applicability of Article.

This article applies to all contracts. In addition, Article 13 herein below applies to projects in which federal funds are used, as indicated in the Special Provisions.

Section 12.02. Prevailing Wage Rate.

Pursuant to Chapter 1 of Part 7, Division 2 of the Labor Code, commencing with section 1770, the Director of Industrial Relations (DIR) of the State of California ascertained the prevailing rate of wages in the locality in which the work on the project

is to be performed for each craft, classification, or type of worker needed to execute this contract. The prevailing rates so determined are on file with the Department of Industrial Relations. (See Appendix.) Said prevailing wage rates hereby are incorporated in this agreement and made a part hereof.

The Contractor shall obtain and cause copies of the determination of the prevailing rate of per diem wages to be posted in a prominent place at the job site, in accordance with the regulations of the Department of Industrial Relations.

Section 12.03. Payment of Prevailing Wage Rates.

Contractor shall pay, and shall cause all subcontractors under him to pay, not less than the specified prevailing rates of wages to all workers employed on the work in the execution of this contract and shall comply with all applicable requirements of California Labor Code sections 1720 through 1781.

Section 12.04. Travel and Subsistence Pay.

Travel and subsistence payments shall be made by Contractor and all subcontractors in accordance with section 1773.8 of the Labor Code.

Section 12.05. Wage Rate for Crafts Not Listed.

In the event this contract calls for work requiring any craft, classification, or type of worker for which the DIR has not specified a prevailing wage rate, the City will issue an addendum specifying a prevailing wage rate after consultation with the DIR, and Contractor and all subcontractors shall pay each worker engaged in the specified work not less than such rates. Pending such addendum, the wages may be assumed to be those in the applicable collective bargaining agreement, but no adjustment in the contract price shall be made if such assumption is incorrect.

Section 12.06. Records of Hours Worked and Wages.

Contractor shall maintain, and shall cause all subcontractors under him to maintain, records of the hours and wages of all employees employed on the work, and such records shall be open at all times for inspection by the City and/or the Division of Labor Statistics and Law Enforcement, in accordance with sections 1776 and 1812 of the Labor Code.

Section 12.07. Underpayment of Wages.

Contractor agrees that in the event of underpayment of wages to any employee on the work, whether by Contractor or any subcontractor, the City may retain from payments due to Contractor, an amount sufficient to pay such worker the difference

between the wages required to be paid by the DIR, and the wages actually paid such worker for the total number of hours worked. The City may disperse such retention to such employees.

Section 12.08. Penalties.

In accordance with Articles 2 and 3, Chapter 1, Part 7, Division 2 of the Labor Code, particularly sections 1775 and 1813, Contractor shall forfeit to City as a penalty the sum of twenty-five dollars ($25.00) over and above any retentions or withholds otherwise authorized by the agreement, as follows:

A. For each calendar day, or portion thereof, for each worker paid less than the applicable prevailing wages for any work done under this contract by him or any subcontractor above him; and/or

B. For each worker employed in the execution of this agreement by Contractor or by any subcontractor for each calendar day during which such worker is required or permitted to work more than eight (8) hours in any one calendar day and forty (40) hours in any one calendar week in violation of the provisions of said Article 3.

Section 12.09. Apprentices.

Attention is directed to the provisions of sections 1777.5 and 1777.6 of the Labor Code concerning the employment of apprentices by Contractor or any subcontractor under him.

The Contractor and all subcontractors under him shall comply with the requirements of section 1777.5 and section 1777.6 in the employment of apprentices.

Information relative to apprentice standards, wage schedules, and other requirements may be obtained from the Director of Industrial Relations, ex-officio the Administrator of Apprenticeship, San Francisco, California, or from the Division of Apprenticeship Standards and its branch offices. Adequate supervision of all apprentices shall be maintained at all times by Contractor and any subcontractor employing such apprentice.

Section 12.10. All Employees on Payrolls; Submission of Records.

Contractor shall not carry on his payrolls any person not actually employed by him, nor shall he carry on his payrolls employees of a subcontractor. Contractor shall show on his payrolls all persons actually employed by him on the work, in any capacity. Contractor shall supervise all subcontractors to ensure that all subcontractors comply with this section.

At the request of the Project Manager, Contractor shall provide, and shall require all subcontractors to provide, verification of the actual wages paid to any or all employees on the work, including but not limited to copies of the payroll records.

Section 12.11. Hours of Work; Approval of Schedules.

Eight (8) hours of labor constitutes a legal day's work, and forty (40) hours constitutes a legal work week. No worker employed at any time by the Contractor, or by any subcontractor upon the work, shall be required or permitted to work thereon more than eight (8) hours in any one calendar day or forty (40) hours in any one week, except as provided in Labor Code sections 1810 through 1815, inclusive.

Overtime shall be paid at the rate of not less than one and one-half (1-1/2) times the basic rate of pay, or at such higher rate as may be required by the DIR, applicable statutes or collective bargaining agreements.

The City reserves the right to approve or disapprove the days scheduled for work, and the hours during which work is in progress. The proposed days and hours of work shall be shown on the Schedule of Work required by section 3.01 hereof, and shall be modified from time to time as appropriate.

The Contractor is referred to the Special Provisions for further particulars regarding scheduling.

Section 12.12. Compliance with State Anti-Discrimination Laws.

The Contractor shall comply with section 1735 of the Labor Code, which provides that no discrimination shall be made in the employment of persons upon public works because of race, religious creed, color, national origin, ancestry, physical disability, mental disability, medical condition, genetic information, marital status, sex, gender, gender identity, gender expression, age, or sexual orientation of such persons, except as provided in Section 12940 of the Government Code, and every contractor for public works violating this section is subject to all the penalties imposed for a violation of Chapter 1 of Part 7, Division 2 of the Labor Code.

Contractor's attention is directed to Article 13 hereof, setting for additional federal requirements which address this subject, but which do not supersede or in any way make ineffective the requirements of this section.

ARTICLE 13. FEDERAL REQUIREMENTS.

Section 13.01. Applicability of Article.

In addition to Article 12 hereinabove, this article applies when federal funds are used on the project. The Special Provisions specify whether such funds are being used, and set forth federal provisions applicable to the particular project, if any, in addition to those set forth herein.

Section 13.02. Davis-Bacon Act.

If the Special Provisions specify that federal funds are being used on this project, the Davis-Bacon Act applies. Federally determined minimum wage rates may exceed the State of California prevailing wage rates determined pursuant to Article 12 hereof. In case of a difference in the minimum wage rates, Contractor must pay not less than the higher rate.

In addition, the following federal regulations apply along with any amendments that may take effect prior to execution of their agreement:

From 29 CFR Section 5.5 (a):

(1) Minimum wages.

(i) All laborers and mechanics employed or working upon the site of the work (or under the United States Housing Act of 1937 or under the Housing Act of 1949 in the construction or development of the project), will be paid unconditionally and not less often than once a week, and without subsequent deduction or rebate on any account (except such payroll deductions as are permitted by regulations issued by the Secretary of Labor under the Copeland Act (29 CFR Part 3), the full amount of wages and bona fide fringe benefits (or cash equivalents thereof) due at time of payment computed at rates not less than those contained in the wage determination of the Secretary of Labor which is attached hereto and made a part hereof [see Appendix], regardless of any contractual relationship which may be alleged to exist between the contractor and such laborers and mechanics. Contributions made or costs reasonably anticipated for bona fide fringe benefits under section 1(b)(2) of the Davis-Bacon Act on behalf of laborers or mechanics are considered wages paid to such laborers or mechanics, subject to the provisions of paragraph (a)(1)(iv) of this section; also, regular contributions made or costs

incurred for more than a weekly period (but not less often than quarterly) under plans, funds, or programs which cover the particular weekly period, are deemed to be constructively made or incurred during such weekly period. Such laborers and mechanics shall be paid the appropriate wage rate and fringe benefits on the wage determination for the classification of work actually performed, without regard to skill, except as provided in section 5.5(a)(4). Laborers or mechanics performing work in more than one classification may be compensated at the rate specified for each classification for the time actually worked therein: Provided, that the employer's payroll records accurately set forth the time spent in each classification in which work is performed. The wage determination (including any additional classification and wage rates conformed under paragraph (a) (1) (ii) of this section) and the Davis-Bacon poster (WH-1321) shall be posted at all times by the contractor and its subcontractors at the site of the work in a prominent and accessible place where it can be easily seen by the workers.

(ii) (A) The City shall require that any class of laborers or mechanics which is not listed in the wage contract shall be classified in conformance with the wage determination. The City shall approve an additional classification and wage rate and fringe benefits therefor only when the following criteria have been met:

(1) The work to be performed by the classification requested is not performed by a classification in the wage determination; and

(2) The classification is utilized in the area by the construction industry; and

(3) The proposed wage rate, including any bona fide fringe benefits, bears a reasonable relationship to the wage rates contained in the wage determination.

(B) If the contractor and the laborers and mechanics to be employed in the classification (if known), or their representatives, and the City agree on the classification and wage rate (including the amount designated for fringe benefits where appropriate), a report of the action taken shall be sent by the City to the Administrator of the Wage

and Hour Division, Employment Standards Administration, U.S. Department of Labor, authorized representative, will approve, modify, or disapprove every additional classification action within 30 days of receipt and so advise the City or will notify the City within the 30-day period that additional time is necessary.

(C) In the event the contractor, the laborers or mechanics to be employed in the classification or their representatives, and the City do not agree on the proposed classification and wage rate (including the amount designated for fringe benefits, where appropriate), the City shall refer the questions, including the views of all interested parties and recommendation of the City, to the Administrator for determination. The Administrator, or an authorized representative, will issue a determination within 30 days of receipt and so advise the City or will notify the City within the 30-day period that additional time is necessary.

(D) The wage rate (including fringe benefits where appropriate) determined pursuant to subparagraphs (1) (B) or (C) of this paragraph, shall be paid to all workers performing work in the classification under this contract from the first day on which work is performed in the classification.

(iii) Whenever the minimum wage rate prescribed in the contract for a class of laborers or mechanics includes a fringe benefit which is not expressed as an hourly rate, the contractor shall either pay the benefit as stated in the wage determination or shall pay another bona fide fringe benefit or an hourly cash equivalent thereof.

(iv) If the contractor does not make payments to a trustee or other third person, the contractor may consider as part of the wages of any laborer or mechanic the amount of any costs reasonably anticipated in providing bona fide fringe benefits under a plan or program, Provided, that, the Secretary of Labor has found, upon the written request of the contractor, that the applicable standards, of the Davis-Bacon Act have been met. The Secretary of Labor may require the contractor to set aside in a separate account assets for the meeting of obligations under the plan or program.

(2) Withholding.

The City shall upon its own action or upon written request of an authorized representative of the Department of Labor withhold or cause to be withheld from the contractor under this contract or any other federal contract with the same prime contractor, or any other federally assisted contract subject to Davis-Bacon prevailing wage requirements, which is held by the same prime contractor, so much of the accrued payments or advances as may be considered necessary to pay laborers and mechanics, including apprentices, trainees, and helpers, employed by the contractor or any subcontractor the full amount of wages required by the contract. In the event of failure to pay any laborer or mechanic, including any apprentice, trainee, or helper, employed or working on the site of the work (or under the United State Housing Act of 1937 or under the Housing Act of 1949 in the construction or development of the project), all or part of the wages required by the contract, the City may, after written notice to the contractor, sponsor, applicant, or owner, take such action as may be necessary to cause the suspension of any further payment, advance, or guarantee of funds until such violations have ceased.

(3) Payrolls and basic records.

(i) Payrolls and basic records relating thereto shall be maintained by the contractor during the course of the work and preserved for a period of three years thereafter for all laborers and mechanics working at the site of the work (or under the United States Housing Act of 1937, or under the Housing Act of 1949, in the construction or development of the project). Such records shall contain the name, address, and social security number of each such worker, his or her correct classification, hourly rates of wages paid (including rates of contributions or costs anticipated for bona fide fringe benefits or cash equivalents thereof of the types described in section 1(b)(2)(B) of the Davis-Bacon Act), daily and weekly number of hours worked, deductions made and actual wages paid. Whenever the Secretary of Labor has found under 29 CFR 5.5 (a)(1)(iv) that the wages of any laborer or mechanic include the amount of any costs reasonably anticipated in providing benefits under a plan or program described in section 1(b)(2)(B) of the Davis-Bacon Act, the contractor shall maintain records which show that the commitment to provide such benefits is enforceable, that the plan or program is financially responsible, and that the plan or program has been communicated in writing to the laborers or mechanics affected,

and records which show the costs anticipated or the actual cost incurred in providing such benefits. Contractors employing apprentices or trainees under approved programs shall maintain written evidence of the registration of apprenticeship programs and certification of trainee programs, the registration of the apprentices and trainees, and the ratios and wage rates prescribed in the applicable programs.

(ii) (A) The contractor shall submit weekly for each week in which any contract work is performed a copy of all payrolls to the federal agency involved if the agency is a party to the contract, but if the agency is not such a party, the contractor will submit the payrolls to the City for transmission to the agency. The payrolls submitted shall set out accurately and completely all of the information required to be maintained under section 5.5(a)(3)(i) of Regulations, 29 CFR Part 5. This information may be submitted in any form desired. Optional Form WH-347 is available for this purpose and may be purchased from the Superintendent of Documents (Federal Stock Number 029-005-00014-1), U.S. Government Printing Office, Washington, D.C. 20402. The prime contractor is responsible for the submission of copies of payrolls by all subcontractors.

(B) Each payroll submitted shall be accompanied by a "Statement of Compliance," signed by the contractor or subcontractor or his or her agent who pays or supervises the payment of the persons employed under the contract and shall certify the following:

(1) That the payroll for the payroll period contains the information required to be maintained under section 5.5(a)(3)(i) of Regulations, 29 CFR Part 5 and that such information is correct and complete;

(2) That each laborer or mechanic (including each helper, apprentice, and trainee) employed on the contract during the payroll period has been paid the full weekly wages earned, without rebate, either directly or indirectly, and that no deductions have been made either directly or indirectly from the full wages earned, other than permissible

deductions as set forth in Regulations, 29 CFR Part 3;

(3) That each laborer or mechanic has been paid not less than the applicable wage rates and fringe benefits or cash equivalents for the classification of work performed, as specified in the applicable wage determination incorporated into the contract.

(C) The weekly submission of a properly executed certification set forth on the reverse side of Optional Form WH-347 shall satisfy the requirement for submission of the "State of Compliance" required by paragraph (a)(3)(ii)(B) of this section.

(D) The falsification of any of the above certifications may subject the contractor or subcontractor to civil or criminal prosecution under Section 1001 of Title 18 and Section 231 of Title 31 of the United States Code.

(iii) The contractor or subcontractor shall make the records required under paragraph (a)(3)(i) of this section available for inspection, copying, or transcription by authorized representatives of the Federal agency involved or the Department of Labor, and shall permit such representatives to interview employees during working hours on the job. If the contractor or subcontractor fails to submit the required records or to make them available, the Federal agency may, after written notice to the contractor, sponsor, applicant, or owner, take such action as may be necessary to cause the suspension of any further payment, advance, or guarantee of funds. Furthermore, failure to submit the required records upon request or to make such records available may be grounds for debarment action pursuant to 29 CFR 5.12.

(4) <u>Apprentices and Trainees</u>.

(i) <u>Apprentices</u>.

Apprentices will be permitted to work at less than the predetermined rate for the work they performed when they are employed pursuant to and individually registered in a bona fide apprenticeship program registered with the U.S. Department of

Labor, Employment and Training, or with a State Apprenticeship Agency recognized by the Bureau, or if a person is employed in his or her first 90 days of probationary employment as an apprentice in such an apprenticeship program, who is not individually registered in the program, but who has been certified by the Bureau of Apprenticeship and Training or a State Apprenticeship Agency (where appropriate) to be eligible for probationary employment as an apprentice. The allowable ratio of apprentices to journeymen on the job site in any craft classification shall not be greater than the ratio permitted to the contractor as to the entire work force under the registered program. Any worker listed on a payroll at an apprentice wage rate, who is not registered or otherwise employed as stated above, shall be paid not less than the applicable wage rate on the wage determination for the classification of work actually performed. In addition, any apprentice performing work on the job site in excess of the ratio permitted under the registered program shall be paid not less than the applicable wage rate on the wage determination for the work actually performed. Where a contractor is performing construction on a project in a locality other than that in which its program is registered, the ratios and wage rates (expressed in percentages of the journeyman's hourly rate) specified in the contractor's or subcontractor's registered program shall be observed. Every apprentice must be paid at not less than the rate specified in the registered program for the apprentice's level of progress, expressed as a percentage of the journeymen hourly rate specified in the applicable wage determination. Apprentices shall be paid fringe benefits in accordance with the provisions of the apprenticeship program. If the apprenticeship program does not specify fringe benefits, apprentices must be paid the full amount of fringe benefits listed on the wage determination for the applicable classification. If the Administrator determines that a different practice prevails for the applicable apprentice classification, fringes shall be paid in accordance with that determination. In the event the Bureau of Apprenticeship and Training, or a State Apprenticeship Agency recognized by the Bureau, withdraws approval of an apprenticeship program, the contractor will no longer be permitted to utilize apprentices at less than the applicable predetermined rate for the work performed until an acceptable program is approved.

(ii) <u>Trainees</u>.

Except as provided in 29 CFR 5.16, trainees will not be permitted to work at less than the predetermined rate for the work performed unless they are employed pursuant to and individually registered in a program which has received prior approval, evidenced by formal certification by the U.S. Department of Labor, Employment and Training Administration. The ratio of trainees to journeymen on the job site shall not be greater than permitted under the plan approved by the Employment and Training Administration. Every trainee must be paid at not less than the rate specified in the approved program for the trainee's level of progress, expressed as a percentage of the journeyman hourly rate specified in the applicable wage determination. Trainees shall be paid fringe benefits in accordance with the provisions of the trainee program. If the trainee program does not mention fringe benefits, trainees shall be paid the full amount of fringe benefits listed on the wage determination unless the Administrator of the Wage and Hour Division determines that there is an apprenticeship program associated with the corresponding journeyman wage rate on the wage determination which provides for less than full fringe benefits for apprentices. Any employee listed on the payroll at trainee rate who is not registered and participating in a training plan approved by the Employment and Training Administration shall be paid not less than the applicable wage rate on the wage determination for the classification of work actually performed. In addition, any trainee performing work on the job site in excess of the ratio permitted under the registered program shall be paid not less than the applicable wage rate on the wage determination for the work actually performed. In the event the Employment and Training Administration withdraws approval of a training program, the contractor will no longer be permitted to utilize trainees at less than the applicable predetermined rate for the work performed until an acceptable program is approved.

(iii) Equal employment opportunity. The utilization of apprentices, trainees and journeymen under this part shall be in conformity with the equal employment opportunity requirements of Federal Executive Order 11246, as amended, and 29 CFR Part 30.

(5) Compliance with Copeland Act requirements.

The contractor shall comply with the requirements of 29 CFR Part 3, which are incorporated by reference in this contract.

(6) Subcontracts.

The contractor or subcontractor shall insert in any subcontracts the clauses contained in 29 CFR 5.5 (a)(1) through (10), and such other clauses as the federal agency involved may by appropriate instructions require, and also a clause requiring the subcontractors to include these clauses in any lower tier subcontracts. The prime contractor shall be responsible for the compliance by any subcontractor or lower tier subcontractor with all the contract clauses in 29 CFR 5.5.

(7) Contract termination; debarment.

A breach of the contract clauses in 29 CFR 5.5 may be grounds for termination of the contract, and for debarment as a contractor and a subcontractor as provided in 29 CFR 5.12.

(8) Compliance with Davis-Bacon and Related Act requirements.

All rulings and interpretations of the Davis-Bacon and Related Acts contained in 20 CFR Parts 1, 3, and 5 are herein incorporated by reference in this contract.

(9) Disputes concerning labor standards.

Disputes arising out of the labor standards provisions of this contract shall not be subject to the general disputes clause of this contract. Such disputes shall be resolved in accordance with the procedures of the Department of Labor set forth in 29 CFR Parts 5, 6, and 7. Disputes within the meaning of this clause include disputes between the contractor (or any of its subcontractors) and the City, the U.S. Department of Labor, or the employees or their representatives.

(10) Certification of Eligibility.

(i) By entering into this contract, the contractor certifies that neither it (nor he or she) nor any person or firm who has an interest in the contractor's firm is a person or firm ineligible to be awarded Government contracts by virtue of section 3(a) of the Davis-Bacon Act or 29 CFR 5.12(a)(1).

(ii) No part of this contract shall be subcontracted to any person or firm ineligible for award of a government contract by virtue of section 3(a) of the Davis-Bacon Act or 29 CFR 5.12(a)(1).

(iii) The penalty for making false statements is prescribed in the U.S. Criminal Code, 18 U.S.C. 1001.

(11) Contract Work Hours and Safety Standards Act. The following provisions apply to any contract triggering the Davis Bacon Act which is in an amount in excess of $100,000 and subject to the overtime provisions of the Contract Work Hours and Safety Standards Act. As used in this paragraph, the terms laborers and mechanics include watchmen and guards.

(i) Overtime requirements. No contractor or subcontractor contracting for any part of the contract work which may require or involve the employment of laborers or mechanics shall require or permit any such laborer or mechanic in any workweek in which he or she is employed on such work to work in excess of forty hours in such workweek unless such laborer or mechanic receives compensation at a rate not less than one and one-half times the basic rate of pay for all hours worked in excess of forty hours in such workweek.

(ii) Violation; liability for unpaid wages; liquidated damages. In the event of any violation of the clause set forth in paragraph (11)(i) of this section the contractor and any subcontractor responsible therefor shall be liable for the unpaid wages. In addition, such contractor and subcontractor shall be liable to the United States (in the case of work done under contract for the District of Columbia or a territory, to such District or to such territory), for liquidated damages. Such liquidated damages shall be computed with respect to each individual laborer or mechanic, including watchmen and guards, employed in violation of the clause set forth in paragraph (11)(i) of this section, in the sum of $10 for each calendar day on which such individual was required or permitted to work in excess of the standard workweek of forty hours without payment of the overtime wages required by the clause set forth in paragraph (11)(i) of this section.

(iii) Withholding for unpaid wages and liquidated damages. The City shall upon its own action or upon written request of an authorized representative of the Department of Labor withhold or cause to be withheld, from any moneys payable on account of work performed by the contractor or subcontractor under any such contract or any other Federal contract with the same prime contractor, or any other federally-assisted contract subject to the Contract Work Hours and Safety Standards Act, which is held by

the same prime contractor, such sums as may be determined to be necessary to satisfy any liabilities of such contractor or subcontractor for unpaid wages and liquidated damages as provided in the clause set forth in paragraph (11)(i) of this section.

(iv) Subcontracts. The contractor or subcontractor shall insert in any subcontracts the clauses set forth in paragraph (11)(i) through (iv) of this section and also a clause requiring the subcontractors to include these clauses in any lower tier subcontracts. The prime contractor shall be responsible for compliance by any subcontractor or lower tier subcontractor with the clauses set forth in paragraphs (11)(i) through (iv) of this section.

Section 13.03. Compliance with Federal Anti-Discrimination Laws.

Contractor shall comply with the following:

1. The Contractor will not discriminate against any employee or applicant for employment because of race, color, religion, sex, or national origin. The Contractor will take affirmative action to ensure that applicants are employed, and that employees are treated during employment, without regard to their race, color, religion, sex or national origin. Such action shall include, but not be limited to the following: employment, upgrading, demotion, or transfer; recruitment or recruitment advertising; layoff or termination; rates of pay or other forms of compensation; and selection for training, including apprenticeship. The Contractor agrees to post in conspicuous places, available to employees and applicants for employment, notices to be provided by the City setting forth the provisions of the Equal Opportunity clause.

2. The Contractor will, in all solicitations or advertisements for employees placed by or on behalf of the Contractor, state that all qualified applicants will receive consideration for employment without regard to race, color, religion, sex or national origin.

3. The Contractor will send to each labor union or representative of workers with which he has a collective bargaining agreement or other contract or understanding, a notice, to be provided by the City, advising the labor union or workers' representative of the Contractor's commitments under this Equal Opportunity clause and shall post copies of the notice in conspicuous places available to employees and applicants for employment.

4. The contractor will comply with all provisions of Federal Executive Order No. 11246 of September 24, 1965, and any amendments thereto, and of the rules, regulations, and relevant orders of the Secretary of Labor.

5. The Contractor will furnish all information and reports required by Federal Executive Order No. 11246 of September 24, 1965, and any amendments thereto, and by the rules, regulations, and orders of the Secretary of Labor, or pursuant thereto, and will permit access to his books, records, and accounts by the contracting agency and the Secretary of Labor for purposes of investigation to ascertain compliance with such rules, regulations, and orders.

6. In the event of the Contractor's noncompliance with the nondiscrimination clauses of this contract or with any of such federal rules, regulations, or orders, this contract may be cancelled, terminated, or suspended in whole or in part and the Contractor may be declared ineligible for further City contracts in accordance with procedures authorized in Federal Executive Order No. 11246 of September 24, 1965, and any amendments thereto, and such other sanctions may be imposed and remedies invoked as provided in Federal Executive Order No. 11246 of September 24, 1965, and any amendments thereto, or by rule, regulation, or order of the Secretary of Labor, regulation, or order of the Secretary of Labor, or as otherwise provided by law.

7. The Contractor will include the provisions of paragraphs (1) through (7) in every subcontract or purchase order unless exempted by rules, regulations, or orders of the Secretary of Labor issued pursuant to section 204 of Federal Executive Order No. 11246 of September 24, 1965, and any amendments thereto, so that such provisions will be binding upon each subcontractor or vendor. The Contractor will take such action with respect to any subcontract or purchase order as the City may direct as a means of enforcing such provisions including sanctions for noncompliance: Provided, however, that in the event the Contractor becomes involved in or is threatened with litigation with a subcontractor or vendor as a result of such direction by the City, the Contractor may request in writing to the City, who, in turn, may request the United States to enter into such litigation to protect the interests of the City and of the United States.

Section 13.04. Compliance with Contract Hours and Safety Standards Act.

It is the Contractor's responsibility to comply with, implement, and enforce all relevant provisions of the Safety and Health Regulations for Construction promulgated by the Secretary of Labor under section 107 of the Contract Hours and Safety Standards Act (40 U.S.C. S333) as set forth in Title 29 CFR section 1926.1 et seq. Copies of these regulations may be obtained from Labor Building, 14th and Constitution Avenue, NW, Washington, D.C. 20013.

ARTICLE 14. PROTECTION OF WORKERS AND PUBLIC PROPERTY.

Section 14.01. Protection of Persons and Property.

Contractor shall at all times, until final acceptance and payment hereunder, maintain adequate protection against injury to persons, including employees, or damage to property, on or near the work, or adjacent to the work.

Contractor shall provide a safe environment for all functions to be performed by the Project Manager and the City Inspectors, and a safe place for all employees to work.

Contractor shall comply with all occupational safety laws, rules and regulations applicable to the work.

Section 14.02. Protection and Repair of Work.

Contractor shall maintain adequate protection of the City's structures, facilities, equipment, tools, materials, and any other property on or adjacent to the premises against damage, loss, or theft by providing adequate security measures. The Contractor shall, until final payment hereunder, maintain adequate protection of all of his work and work performed by others under this contract from damage, loss, defacement, or vandalism.

Contractor assumes full liability for the security and risk of loss from any cause of materials stored, work performed, and existing improvements on the site, and agrees to replace, at no cost to the City, at the time they are needed for incorporation in the work, any materials or work that may have become lost, damaged, destroyed, stolen, vandalized, or have otherwise been rendered unsuitable for use from any cause. Contractor shall repair or replace any such damage and remove any damaged or defaced material and/or equipment from the project site at no cost to the City, and Article 9 hereof shall apply to such material or equipment.

Section 14.03. Protection of Workers.

Contractor shall take all necessary precautions for the safety of all employees and others on the work, and to comply with all applicable provisions of federal, state and local safety laws and building codes to prevent accidents or injury to persons on, about, or adjacent to the premises where the work is being performed.

Contractor shall erect and properly maintain at all times, as required by the conditions and progress of the work, all necessary safeguards for the protection of workers and the public, and shall post danger signs warning against the hazards created

by such features of construction as protruding nails, hod hoists, well holes, elevator hatchways, scaffolding, window openings, stairways, and falling materials.

Contractor shall designate a responsible member of his organization on the work, whose duty shall be the prevention of accidents. The name and position of the person designated shall be reported to the Project Manager by the Contractor.

Contractor immediately shall replace or repair any unsafe ladder, scaffolding, shoring, or bracing, or correct any other dangerous or hazardous situation that may exist.

The responsibility for maintaining a safe working site shall be the Contractor's, and the City undertakes no obligation to suspend the work or notify the Contractor of any hazardous conditions or noncompliance with safety laws.

Section 14.04. Working Limits and Regulations.

Contractor shall confine his apparatus, storage and materials, and construction operations to such limits as may be directed by the Project Manager, and shall not unreasonably encumber the project site or adjacent areas with his materials and/or equipment.

Contractor shall enforce any instructions from the Project Manager regarding signs, advertising, fires, danger signals, barricades, and/or smoking.

Section 14.05. Protection of Existing Improvements.

Contractor shall clean the portions of existing improvements and facilities which are used by, traversed or dirtied by the workers on the work, normal maintenance due to use by City employees or the public excepted.

All existing improvements and facilities shall be protected from any damage resulting from the operations, equipment or workers of the Contractor during the course of the construction.

All damage shall be replaced, repaired, and restored to its original condition without additional cost to the City.

Section 14.06. Traffic Signals and Traffic Control.

Existing signs, lights, traffic signals, control boxes, hydrants, meters, and other similar items occurring within the sidewalk areas shall be kept free of obstructions and accessible at all times. All such items shall be protected from Contractor's operations and shall not be obliterated or obscured by his equipment or materials.

Should it be necessary to cover up, move, or alter such items, this shall be done only with permission of the authorities having jurisdiction of the items involved.

Should it be necessary to block a street or sidewalk, Contractor shall first notify the Project Manager and the police and fire agencies with jurisdiction, and shall comply with their instructions, including scheduling limitations.

Section 14.07. Security of the Site.

Contractor shall take such steps as are necessary to adequately secure the site at such times as workers are not present on the site. At the Project Manager's request, Contractor shall meet with representatives of the police and fire agencies with jurisdiction, and shall comply with reasonable requests by such departments to secure the site.

Contractor's attention is directed to the Special Provisions regarding requirements for fencing the site, gates, and screening.

Section 14.08. Watchmen.

Contractor may, at his option and his expense, provide night watchmen for the work. The facilities for such watchmen shall be subject to approval of all agencies with jurisdiction, and this contract shall not constitute the approval by any City department with jurisdiction of the facilities proposed by the Contractor.

Section 14.09. Removal of Barricades.

Upon completion of the work, Contractor shall remove from the site all materials used for barricades, temporary scaffolding, or any other temporary uses.

ARTICLE 15. PROTECTION OF ADJACENT PROPERTY.

Section 15.01. Protection of Adjacent Property; Notices.

In addition to any requirements imposed by law, Contractor shall shore up, brace, underpin, and protect as may be necessary all foundations and other parts of all existing structures on the site or adjacent to the site which are in any way affected by the excavations or other operations connected with the completion of the work.

Prior to excavation, Contractor shall notify all public utilities and governmental agencies of the work proposed, and shall ascertain from them the exact location of their utilities.

Prior to commencing any work which in any way affects adjoining or adjacent land or buildings thereon, or public utilities, the Contractor shall send the Owner and occupants thereof a notice, which specifies the type of work to be done, the schedule of the work, the impacts expected from the work, and the protective measures being taken by the Contractor. The notice shall also specify that any person receiving such notice who has questions regarding it may contact the Project Manager.

Whenever any notice is required to be given to any adjoining or adjacent landowner or occupant, utility, governmental agency or other party before commencement of any work, such notice shall be given by the Contractor with a copy delivered to the Project Manager.

The Contractor shall, at the instruction of the Project Manager, meet with any recipient of such notice to explain and discuss the proposed work. The Project Manager may make such modifications to the Contractor's proposed working methods as described in the notice as are required to comply with this article, and Contractor shall make such modifications without cost to City.

Section 15.02. Fire Protection.

Contractor shall take all steps necessary to protect all structures from fires and sparks originating on the work, shall comply with all laws and regulations regarding fire protection, and shall comply with all instructions of the fire department with jurisdiction.

Contractor shall notify the Project Manager and the fire department prior to disconnection of either water or electrical service to the site, and shall comply with the fire department's instructions regarding fire safety.

Contractor shall provide fire extinguishers as necessary to protect the site and adjacent structures at all times.

Section 15.03. Indemnity for Losses to Adjacent Property.

Contractor shall defend, indemnify, and save harmless the City from any damages on account of any cause, including settlement and/or the loss of lateral subjacent support of adjoining property, damage to utilities' or governmental agencies' equipment or installations, and from all loss or expense and from all damages for which the City may be liable as a consequence of such injury or damage to adjoining or adjacent property and/or structures, or equipment or installations, including those owned by the City of Colfax.

Any damage arising from or in consequence of the performance of this contract to tracks, pavement, curbs, sidewalks, walls, stairs, sewage and/or drainage structures, mains, pipes, valves, conduits, poles, wires, transformers, trees, shrubs, adjoining work, or to any other improvement or property above or below the surface of the ground, whether private or public, shall be repaired at once by Contractor without expense to the City, if the owner thereof consents.

If, in the opinion of the Project Manager, the best interest of the City requires such repair to be made prior to the execution of any further work, the Project Manager will so notify the Contractor who shall delay or discontinue that part of the work until the necessary repair has been made. Such delay shall not be considered unavoidable and no extension for time of completion of this contract will be granted therefor.

Upon the failure of the Contractor to comply with any such order, or upon Contractor's failure to make immediate emergency repairs which are necessary to protect the work, the City shall do such work itself as is necessary to protect life and property, in its sole discretion, and deduct the total cost of such work from the next progress payment.

Section 15.04. Emergency Safety Actions.

In an emergency affecting the safety of life or property, including adjoining property, the Contractor, without previous instructions or authorizations from the City, is authorized and shall act at the Contractor's discretion and risk to prevent such threatened loss or injury, and Contractor shall bear all costs of such action. Contractor immediately shall notify the Project Manager of such actions, and thereafter shall comply with any instructions issued by the Project Manager.

ARTICLE 16. CONDUCT AND PROSECUTION OF THE WORK.

Section 16.01. Basic Standard.

The Contractor shall take and assume full responsibility for all aspects of the satisfactory and faithful performance of the work in accordance with the Contract Documents.

Section 16.02. Surveys.

The City will establish all required reference benchmarks and lines adjacent to the work. From the information thus provided, the Contractor shall develop and make such additional surveys as are required for construction, such as slope stakes, batter boards, stakes for pipe and other utility locations, and other working points and lines and elevations.

Benchmarks, baselines, property boundaries, line and grad hubs, and other reference and construction points shall thereafter be maintained by the Contractor who shall be responsible for keeping their accuracy and who shall pay all costs of reestablishing them if they are disturbed.

The Contractor shall notify the Project Manager in writing at least ten (10) days prior to the time he will commence work on any part of the construction requiring surveys to be commenced by the Project Manager.

Section 16.03. Layout Work.

Contractor shall be responsible for all layout work, and shall lay out all lines, corners, levels, and grade stakes at the beginning of the project. The exact locations of all partitions shall be laid out on forms, walls, and flooring, as the work progresses. It is the Contractor's responsibility to exercise due care to verify all dimensions shown on the drawings before laying out the work.

The proper placement of the project on the site and the components within the structure is the Contractor's sole responsibility.

Section 16.04. Contractor's Equipment.

The Contractor shall provide adequate and suitable equipment and means of construction to meet all the requirements of the Contract Documents, including completion of the project within the time specified. The Contractor alone shall be responsible for the safety, adequacy, and efficiency of his plant, equipment and methods, and those of all subcontractors on the site.

Section 16.05. Clearing Obstructions.

Unless specified otherwise, the Contractor shall clear all obstructions and prepare the site for the construction. Contractor shall verify dimensions and scale of all plans, and check all dimensions and levels shown thereon against the site after it is graded and prepared for construction.

Section 16.06. Dust Control.

Contractor shall at all times control dust originating from the work done, by sprinkling as needed and shall follow the Project Manager's directions in this regard.

Section 16.07. Existing Conditions Shown on Drawings.

Any investigations conducted by the City of existing conditions on the site are made for the purpose of design only, and there is no guarantee either express or implied, that the conditions indicated are representative of those existing throughout the work, or any part of it, or that unanticipated conditions might not occur.

Where investigations of subsurface conditions have been made by the City in respect to foundation or other subsurface structure design, such information represents only the statement by the City as to the character of materials which actually have been encountered during the investigations, and is only included for the convenience of bidders.

Section 16.08. Discovery of Unknown Conditions, Change Orders.

The Contractor shall promptly, upon discovery, and before the site is disturbed further, notify the Project Manager of any existing or latent condition at the site differing materially from those indicated on the Contract Documents, or physical conditions at the site of any unusual nature, differing materially form those ordinarily encountered in work of this type.

The Project Manager promptly shall investigate, and if he finds the conditions do materially and substantially differ, and such differences cause an increase or decrease in Contractor's cost of, or the time required for, performance of any part of the work, he shall process a change order pursuant to Article 17 hereof.

No claim for extra compensation or time by Contractor for conditions described herein shall be allowed unless Contractor has given the notice required by this section.

Section 16.09. Equipment and Methods.

Only equipment and methods suitable to produce the quality of work required shall be permitted by the Contractor to operate on the work. If any part of the Contractor's plant, equipment, or methods of execution of the work are determined by the Project Manager to be unsafe or inadequate to deliver the required quality or rate of progress of the work, the Project Manager may order the Contractor to improve his facilities or methods, and the Contractor shall promptly comply with such orders; provided, however, that neither compliance with such orders nor failure by the Project Manager to issue such orders shall relieve the Contractor from his obligation to perform the work as required by the Contract Documents.

Section 16.10. Approval of Contractor's Plans.

The approval by the Project Manager of any drawing or method of work proposed by the Contractor shall not relieve the Contractor of his responsibility for compliance with the Contract Documents and shall not constitute any assumption of risk, responsibility, or liability by the City or any officers or employees thereof.

The Contractor shall have no claim for modification to this contract or the time within which the project is to be completed as a result of the failure or partial failure of inefficiency of any plan or method approved by the Project Manager. The Project Manager's approval shall be construed only to mean that the City has no objections to the Contractor using, upon the Contractor's own full responsibility, the plan or method so proposed.

Section 16.11. Temporary Facilities and Services.

The Contractor shall be responsible for providing and maintaining all necessary storage places, field offices, temporary roads, fences, and all utilities, including telephone, electric, gas, and water service to the site during construction at his sole cost and expense. Contractor shall not connect to fire hydrants for construction water without the previous written consent of the fire department with jurisdiction.

Contractor shall comply with all requirements of federal and state law and Colfax City ordinances regarding the placement of temporary facilities on the site, and the City shall not be deemed by this specification to have consented to such placement.

Section 16.12. Proof of Compliance with Contract.

In order that the Project Manager may determine compliance with the requirements of the Contract Documents which are not readily ascertainable through inspection and tests of materials and work, the Contractor shall, at any time requested by the Project Manager, submit such documents or other satisfactory proofs as required by the Project Manager to demonstrate compliance by the Contractor with the Contract Documents.

Section 16.13. Coordination of Work.

The Contractor shall be responsible for coordinating the work of the various subcontractors and trades employed on the work. He shall adjust, correct, and coordinate his work with the work of others so that no discrepancies will result nor unnecessary delays occur.

If completion is delayed because of any acts or omission of any subcontractors, the Contractor shall on that account have no claim against the City for extra compensation or time.

Section 16.14. Joining Work.

Where work of one trade or subcontractor joins or is installed upon the work of another trade or subcontractor, there shall be no discrepancy in mating or joining such work, which shall be done and finished in a good and workmanlike manner. In joining one kind of work with another, the marring or damaging of either shall be corrected at no expense to the City.

Should improper work of any trade be covered by that of another, it shall be the Contractor's responsibility to correct the improper work and to adjust costs between the various contractors or subcontractors, without cost to the City.

The City shall not be responsible for any damages suffered or costs incurred by the Contractor or any other contractor, subcontractor, or worker, resulting directly or indirectly from the award or performance or attempted performance of any other contract or contracts on the work, or caused by any decision by the City respecting the order of precedence in the performance of the contracts awarded for the completion of the work.

The Contractor shall be responsible to other contractors or City forces engaged in work on the site or adjacent thereto for all damages to their work, or persons employed thereon, or delays to their work, resulting from Contractor's failure to complete the work within the time for completion. Contractor shall adjust and coordinate his work with that of others so that no discrepancies result in the whole work, and shall defend and indemnify the City from all claims arising therefrom.

ARTICLE 17. CHANGE ORDERS.

Section 17.01. No Changes Without Consent.

No extra work shall be performed, and no change shall be made, except pursuant to a written change order from the City stating that the extra work or change is authorized, and no claim for any addition to the contract sum or time for completion shall be valid unless so ordered; provided, however, that nothing in this article shall excuse Contractor from proceeding with the prosecution of the work so changed. Contractor shall, when required by the Project Manager, furnish an itemized breakdown of the quantities and prices used in computing the value of any change requested by the Contractor, or that may have been ordered by the City.

Any such change order shall specify the cost adjustments associated therewith, and in no case shall the City pay or become liable to pay any sums different than those specified.

Section 17.02. Change Orders Authorized.

Subject to legal requirements relating to competitive bidding, the City may require changes in, additions to, or deductions from the work to be performed or the materials to be furnished pursuant to the Contract Documents. Adjustments, if any, and the amounts to be paid to Contractor by reason of any such change, addition, or deletion, shall be determined by one or more of the following methods:

A. By a lump sum proposal by the Contractor accepted by formal action by the City; and/or

B. By unit prices contained in the Contractor's original bid and incorporated in the Contract Documents or fixed by subsequent agreement between the City and the Contractor.

C. By such other method approved by the City.

Section 17.03. Change Orders Regarding Time for Completion.

Any time extension authorized by the City pursuant to Article 3 hereof shall be set forth in a change order issued by the City Council.

Section 17.04. Effect on Sureties.

All changes authorized by the Contract Documents may be made without notice to or consent of the sureties on the contract bonds, and shall not reduce their liability on the bonds.

The City reserves the right to require additional payment or performance bonds to secure a change order.

ARTICLE 18. INSPECTIONS.

Section 18.01. Access for Inspection.

The Project Manager, the Project Architect, the City Inspector(s), or other employees or agents of the City shall at all times have access for the purpose of inspection to all parts of the work and to all shops wherein the work is in preparation, and Contractor shall cooperate and furnish such facilities and assistance as needed for the Inspectors.

Section 18.02. Inspections.

All work done and all materials furnished shall be subject to the inspection and approval of the Project Manager, either acting personally or through the City Inspector(s).

Any work constructed without required inspection, or not in compliance with the Contract Documents or instructions or orders of the Project Manager shall, upon the instruction of the Project Manager, be uncovered for inspection and properly restored after inspection and approval, at no cost to the City.

Section 18.03. Authority of City Inspector; Stop Work Notices.

The designated City Inspector shall be considered to be a representative of the Project Manager. It is his duty to inspect those portions of the work to which he is assigned.

The City Inspector shall have the authority to order the work entrusted to his inspection stopped if he determines that the work is proceeding in violation of the Contract Documents or any orders issued by the Project Manager.

Upon issuing a stop work notice, the City Inspector immediately shall notify the Project Manager, who shall inspect the work in question and determine whether it does or does not comply with the Contract Documents. The decision of the Project Manager shall be final. The Contractor shall thereafter comply with the instructions of the Project Manager regarding corrections needed to cure the defect. The superseded work shall be resumed only when such instructions are fulfilled, and a resume work notice is issued by the Project Manager. The Contractor shall not be entitled to an extension of time in the event of such suspension of work.

Section 18.04. Effect of Inspections.

Neither the final inspection and payment, nor any interim inspection or progress payment shall relieve the Contractor of any of his obligation to fulfill the contract as required by the Contract Documents.

Any work, materials or equipment not meeting the requirements and intent of the Contract Documents may be rejected, and unsuitable work or materials shall be made good, notwithstanding the fact that such work or materials may previously have been inspected and/or payment therefor may have been made.

Section 18.05. Inspection of Completed Work.

Should the Project Manager determine that it is necessary or advisable to make an inspection of work already completed at any time before final inspection and acceptance of the work, by removing or exposing the work, Contractor shall, upon instruction of the Project Manager, promptly furnish all necessary facilities, labor, and materials to do so. If such work is found to be defective in any respect due to the fault of Contractor or any subcontractor, Contractor shall defray all expenses of such examination and replacement shall be allowed Contractor and a change order shall be issued.

Section 18.06. Notice to City of Inspection.

Where the Contract Documents, instructions by the Project Manager, laws, ordinances, or any public authority having jurisdiction requires work to be inspected, tested or approved before the work proceeds, such work shall not proceed, nor shall it be covered up without inspection.

The contractor shall give notice to the Project Manager at least two (2) days in advance of the readiness for inspection.

Section 18.07. Authority of Project Manager.

The Project Manager shall decide all questions which may arise as to the quality or acceptability of materials and/or equipment furnished or work performed, and as to the manner of performance and the rate of progress of the work; all questions as to the interpretation of Contract Documents and specifications; all questions as to the acceptable performance of the contract; and all questions as to the compensation.

Section 18.08. Building Inspectors.

The Contractor shall provide access to building inspectors from the jurisdiction in which the project is located. Such building inspectors shall inspect the project for compliance with the applicable building, mechanical, fire and electrical codes.

In the event the Project Manager is an independent contractor of the City, such building inspectors will be independent of the Project Manager and the City Inspectors, and approval by either shall not constitute approval by the other.

The Contractor shall obey all orders of the building inspectors with jurisdiction, and if such building inspector reports a violation of any code within his jurisdiction, the Contractor immediately shall notify the Project Manager.

ARTICLE 19. PUBLIC UTILITIES.

Section 19.01. Utilities Used During Construction.

Contractor shall provide and pay for all necessary water, gas, and electricity required for all trades employed in the performance of this contract. Contractor shall also provide and pay for at least one, and if ordered by the Project Manager, more than one, telephone to be located on the site, and which shall be the primary means of communication between the Project Manager and the Contractor. Said telephone shall be made available to the City Inspector in the performance of his duties, without cost to the City.

The contractor shall send all required notices, make all necessary arrangements, and perform all other services required in the care and maintenance of such utilities.

The Contractor shall assume all financial responsibility concerning said utilities.

All temporary connections to such utilities shall be maintained in such manner as not to interfere with the continuing use of such utilities by the City during the entire progress of the work. Damage to or unscheduled disruption of existing utilities shall be repaired immediately, at no cost to the City.

The enclosing of such public utility equipment shall be done by the Contractor consistently with the requirements of the utility. Upon completion of the work, the contractor shall remove all enclosures and fill in and leave in a finished condition all openings for such utilities.

Section 19.02. Lighting.

Contractor shall furnish, wire for, install, and maintain temporary electric light where it is necessary to provide illumination for the proper performance and inspection of the work. The lighting shall provide sufficient illumination and shall be so placed and distributed that these specifications can be easily read in every place where said work is being performed. This temporary lighting equipment may be moved about, but shall be maintained throughout the work, available for the use of the Project Manager or City Inspector, whenever required for inspection.

Section 19.03. Permanent Utilities.

The Contractor shall install all permanent utilities called for by the Contract Documents strictly in compliance with all laws, regulations and requirements of the particular utility company or governmental agency providing the utility.

Section 19.04. Toilet Facilities for Workers.

The Contractor shall provide and maintain for the duration of the work temporary toilet facilities as required for the workers on the job. Such facilities shall conform to the requirements of the Placer County Health Department, and shall be weather-tight structures with raised floors.

The Contractor shall service such facilities daily, and shall pump such facilities as required, to maintain them in a clean and sanitary condition.

ARTICLE 20. PERMITS, LICENSES, ORDINANCES, AND REGULATIONS.

Section 20.01. Basic Standard.

The Contractor shall conduct the work so that all laws and ordinances for the protection of the public and the workers shall be obeyed fully both by Contractor and by all subcontractors on the site.

Contractor shall obtain and keep current all licenses or permits required by the Contractor's State License Law and/or other licenses required to authorize him to perform the work, and shall require all subcontractors to comply with this section.

Section 20.02. Permits.

Unless otherwise provided by the Contract Documents or ordered by the Project Manager, the Contractor shall obtain all permits, licenses, and/or entitlements that are required for the performance of the work by all laws, ordinances, rules, regulations, or orders of any officer and/or body with jurisdiction, shall give all notices necessary in connection therewith, and shall pay all fees lawfully required relating thereto and all costs and expenses incurred on account thereof.

Section 20.03. Compliance with Laws and Regulations.

The Contractor shall keep himself fully informed of and shall observe and comply with, and shall cause any and all persons, firms, or corporations employed by him or under him to observe and comply with all federal and state laws, and county or municipal ordinances, regulations, orders, and decrees which in any manner affect those engaged or employed on the work, or the materials used in the work, or in any way affect the conduct of the work.

Section 20.04. Compliance with Laws and Regulations Indemnity.

Contractor shall save harmless, defend, and indemnify the City and all of its officers, agents, and employees against any liability or claim arising from or based upon the violation of any law, ordinance, regulation, order, or decree, whether by himself, his agents, employees, or his subcontractors or their agents or employees.

Section 20.05. Specific State Laws and Regulations.

In addition to the general requirements set forth above, Contractor's attention is directed to, and Contractor shall be responsible for conducting the project in compliance with all laws of the State of California governing the construction of public buildings, including, without limitation, the following:

1. The California Health & Safety Code and all applicable administrative code regulations adopted pursuant thereto.

2. All laws governing the employment of labor, qualifications for employment of aliens, payment of employees, convict-made materials, domestic and foreign materials, and accident prevention.

3. Title XIX of the California Administrative Code entitled "Public Safety," Chapter 1, State Fire Marshal, subchapter 1, "General Fire and Panic Safety."

4. General Industrial Safety Orders. Contractor, and all subcontractors, shall observe and conform to the provisions of Title VIII of the California Administrative Code relating to safe and proper use, construction, disposal, etc. of materials, machinery, and building appurtenances as therein set forth.

5. Code rules and safety orders. All work and materials shall be in full accordance with the latest rules and regulations of the State Fire Marshal; the safety orders of the Division of Industrial Safety; and Department of Industrial Relations.

All of the above laws and regulations are expressly incorporated in this contract, and are as much a part of the Contract Documents as if they were incorporated in their entirety in these general conditions.

The Contractor shall not interpret the enumeration set forth above as being a complete listing of all applicable laws. It is Contractor's responsibility to inform himself regarding the requirements of all applicable laws and to obey them, and Contractor agrees by execution of the Contract Documents to do so at his sole cost, expense and risk.

Section 20.06. Compliance with Conditions of Permits.

Contractor shall conduct the work in conformity with the conditions imposed on all permits or other entitlements which address the performance of the work by the Contractor, whether or not such permits or entitlements are incorporated by the Contract Documents.

Such permits may include, but are not limited to, measures required during the construction of the work and incorporated in the project to avoid or mitigate the environmental effects of the project, pursuant to the California Environmental Quality Act, and such conditions imposed on use permits issued by any agency with jurisdiction.

It shall be Contractor's responsibility at all stages, from bidding through final completion, to inform himself of the requirements of any such permits.

Contractor's attention is directed to the Special Provisions setting forth additional requirements, if any, regarding this subject.

ARTICLE 21. PRESERVATION AND CLEANING.

Section 21.01. Protection of Work.

The Contractor shall protect and preserve the work from all damage or accident, and shall at his cost provide any temporary roofs, window and door coverings, enclosures, boxings, or other construction as required by the Project Manager for this purpose.

Section 21.02. Periodic Cleaning of Project.

The Contractor shall properly clean the work and the worksite as it progresses, and from time to time shall remove all dirt, debris, waste, rubbish, and implements of service from the project and the working area.

Contractor, at his sole cost, shall contract with a disposal company to remove all such rubbish, and shall have the containers therefor emptied at frequent enough intervals so that waste does not overflow the containers.

Section 21.03. Final Cleaning of Project.

Prior to final acceptance, the Contractor shall thoroughly clean the interior and exterior of the work, and the site and adjacent areas, including fixtures, equipment,

floors and hardware, and shall remove all fingerprints, plaster spots, stains, paint spots, and accumulated dust and dirt. Such cleaning shall include all windows, window sills and ledges, horizontal projections, porch floors, steps, rails, sidewalks, carpets, and other surfaces where debris may have collected, and all plumbing fixtures and unpainted metal.

All temporary labels, tags, and coverings shall be removed. Surfaces that are waxed shall be polished.

Such final cleaning will not be accepted unless the project is in all respects ready to occupy without further cleaning by City forces.

ARTICLE 22. OCCUPANCY BY CITY.

Section 22.01. Use of Completed Work.

Whenever, in the opinion of the City, the work or any part thereof, is in a condition suitable for use, and the best interests of the City require such use, the City may take possession, connect to, and open for public or City use the work or any part thereof.

Section 22.02. Repairs or Renewal in the Work.

Prior to the date of final acceptance of the work by the City, all necessary repairs or renewals in the portion of the work occupied pursuant to Section 22.01 hereinabove, or part thereof, made necessary due to defective material and/or workmanship, or to the operations of the Contractor, ordinary wear and tear excepted, shall be made at the expense of the Contractor.

Section 22.03. Effect of Occupancy.

The occupancy by the City of the work or any part thereof as contemplated in this article shall in no case be construed as constituting acceptance by the City of the work or any part thereof. Such use shall neither relieve Contractor of any of his responsibilities under the Contract Documents, nor act as a waiver by the City of any of the terms and/or conditions of the Contract Documents.

Section 22.04. Coordination with Other Activities.

In the event that the building, or any portion of the site is occupied by the City during the work, it shall be the responsibility of the Contractor to conduct his operations so as not to unreasonably interfere with the use of the occupied portions by the City.

The Contractor shall submit periodic schedules to the Project Manager proposing the times, areas, and types of work to be done within such areas. The Project Manager shall approve, conditionally approve, or reject such schedule, and the Contractor shall comply with the Project Manager's instruction.

In the event that the work produces conditions rendering uninhabitable the portions of the building, the site, or other areas occupied by the City, either because of noise, dust, vibration, smoke, fumes, or for any other cause whatsoever, the Project Manager may order the work ceased, or modifications to the schedule, and the Contractor shall comply.

Unless specified to the contrary in a change order, the Contractor shall be entitled to no time extension nor increase in the contract price by virtue of conflicts between the Contractor's work and the occupancy by the City of portions of the project, the site, or other areas, and resulting stop work orders issued pursuant to this section.

ARTICLE 23. PROGRESS PAYMENTS.

Section 23.01. Submission of Monthly Progress Payment Claims.

On or before the seventh (7th) day of each month, Contractor shall prepare and forward to the Project Manager a statement in writing, detailing the following work done during the preceding month:

A. The units of work completed during the preceding month, with reference to the progress schedule approved pursuant to Article 3, and the date of inspection and acceptance thereof.

B. The portion of the progress claim attributable to such units of work.

C. All acceptable materials furnished and delivered to and stored on the site for use in the performance of the work, but not yet incorporated in the work.

C. All acceptable materials furnished and delivered to and stored on the site for use in the performance of the work, but not yet incorporated in the work.

D. The value of such materials, with reference to the schedules of value provided pursuant to Article 3 hereof.

E. The date of inspection and acceptance by the City of any such materials.

Such claims shall be executed by the Contractor under penalty of perjury.

If the Contract Documents require the sampling and testing of any such materials or labor, the claim shall indicate whether such sampling and testing has been approved and, if so, the date thereof.

The Project Manager shall verify all such progress payment claims and shall take such steps as are necessary to investigate the accuracy of any statements made by the Contractor. Contractor shall provide such other and further documentation as ordered by the Project Manager to enable verification of a claim for a progress payment.

The Project Manager shall verify the claims for progress payments by use of the schedule of work and value of materials presented by the Contractor pursuant to Article 3 hereinabove.

Section 23.02. Payment; Withholds.

Upon approval of a claim for progress payment by the Project Manager, such claim shall be paid; provided, however, that the following amounts shall be withheld as security:

A. Up to ten percent (10%) of the value of the work done;

B. Up to ten percent (10%) of the value of the acceptable materials delivered to the site but not yet incorporated in the work.

On or before the thirtieth (30th) day of each month, the City shall pay to Contractor, while Contractor is carrying on the work, the balance of any progress payment not withheld as set forth above, after deducting therefrom all previous payments and all sums to be retained under the provisions of law or of the Contract Documents.

No such statement by the Contractor nor payment by the City shall be construed to be an acceptance by the City of any defective work or improper materials.

Section 23.03. Posting Securities in Lieu of Withholds.

Pursuant to Public Contracts Code section 22300, at the request and expense of the Contractor, securities equivalent to the amount withheld shall be deposited with the City or with a state or federally chartered bank in California as the escrow agent, who shall pay such monies to the Contractor upon satisfactory completion of the contract. Alternatively, at the request and expense of the Contractor, the security withheld shall be paid by City directly to the escrow agent, as provided in Section 22300.

Securities eligible for investment under this section shall include those authorized by Section 22300.

The Contractor shall be the beneficial owner of any securities substituted for monies withheld and shall receive any interest thereon.

Section 23.04. Retaining Additional Amounts; Grounds.

In addition to the amounts which the City may withhold as provided in section 23.02, the City shall retain a sufficient amount or amounts of any payment or payments otherwise due to Contractor as in the sole discretion of the City as may be necessary to protect the City in the event of the following:

1. Payments which may be past due and payable for just claims against the Contractor or any subcontractor for labor or materials furnished in or about the performance of the work on the project pursuant to the Contract Documents;

2. For defective work not remedied;

3. For failure of the Contractor to make proper payments to any of his subcontractors;

4. For the occurrence of reasonable doubt that the contract can be completed for the balance of payments then unpaid to the contractor, or the time remaining until the agreed completion date;

5. For failure of the Contractor to comply with any lawful or proper direction concerning the work given by any City representative authorized to have given such instruction;

6. For claims and/or penalties which state law assesses against the Contractor for violation of such law;

7. For any claim or penalty asserted against the City by virtue of the Contractor's failure to comply with the provisions of all governing laws, ordinances, regulations, rules, and orders;

8. For any reason specified elsewhere in the Contract Documents as grounds for a retention.

In order to adequately protect the City, the Contractor agrees that the basic standard to determine the amount of retention pursuant to this section shall be one hundred twenty-five percent (125%) of the amounts claimed or the value of the work not done or defectively done; provided, however, that City retains the authority to retain greater sums should such sums be necessary in the City's discretion to adequately protect it.

The City retains the right to make, or not to make, any partial progress payment involving sums not in dispute, or to retain the total progress payment pending resolution of any such dispute.

Section 23.05. Disbursement of Withheld Amounts.

The City, in its sole discretion, may apply any such retained amount or amounts to the payment of any such claims resulting in a retention. The Contractor agrees and hereby designates the City as his agent for such purposes, and any payment so made by the City shall be considered as a payment made under this contract by the City to the Contractor. The City shall not be liable to Contractor for any such payments made in good faith. Such payments may be made without a prior judicial determination of the claim or claims. The City shall render to the Contractor a proper accounting of any such funds disbursed on behalf of the Contractor.

Prior to applying such amounts as stated hereinabove, City shall afford Contractor an opportunity to present good cause, if any he has, why the claim or claims in issue are not valid or just claims against the Contractor. The City then reserves the right to take such further steps as are appropriate, in its sole discretion, including, but not limited to, seeking a judicial resolution of the controversy.

Section 23.06. Correction of Statement and Withholding of Payment.

No inaccuracy or error in any statement provided by Contractor shall operate to release the Contractor or any surety from the error, or from damages arising from such work, or from any obligation imposed by the Contract Documents. The City shall retain the right subsequently to correct any error made in any previously issued claim for the progress payment, or progress payment issued, by later adjustments to subsequent progress payments.

Section 23.07. Effect of Progress Payments.

Neither the payment, the withholding, nor the retention of all or any portion of any progress payment claimed to be due and owing to Contractor shall operate in any way to relieve Contractor from his obligations under this agreement. Contractor shall continue diligently to prosecute the work without reference to the payment, withhold, or retention of any progress payment. The payment, withhold, or retention of any progress payment shall not be grounds for an extension of time within which the Contractor is obligated to complete the contract.

ARTICLE 24. FINAL INSPECTION.

Section 24.01. Notice of Final Inspection.

When the work is completed, the Contractor shall request a final inspection. Within ten (10) days of the receipt of such request, the Project Manager shall make a final inspection. The Contractor or his representatives may be present at the final inspection. The purpose of such final inspection shall be to determine whether the work has been completed in accordance with the Contract Documents, including all change orders and all interpretations and instructions previously issued.

Section 24.02. Punch List.

The Project Manager shall notify the Contractor in writing of any deficiencies to be remedied prior to final acceptance, by preparing a written list, known in the industry as a punch list.

The Contractor shall remedy all items shown on the punch list prior to final acceptance by the Project Manager.

The Project Manager is not authorized to amend the contract by use of the punch list; it is provided solely for the benefit of the contractor to enable him to determine what items must be corrected before final acceptance will be recommended by the Project Manager. The City reserves the right to require compliance with the contract Documents, notwithstanding the issuance of a punch list or the completion by the Contractor of all items on the punch list.

In the event that the work still does not comply with the Contract Documents, the City reserves the right to issue such further punch lists as may be required, or to deduct from the final payment the cost of correction of any work not completed in accordance with the Contract Documents, but accepted by the City, without the issuance of further punch lists.

ARTICLE 25. ACCEPTANCE AND FINAL PAYMENT.

Section 25.01. Contractor's Request for Final Payment.

When he determines that the contract is complete and all items on the punch list have been satisfied, or he contends that such items are not required by the Contract Documents, the Contractor shall submit a request for final payment.

Section 25.02. Additional Submissions.

Simultaneously with the Contractor's request for final payment, the Contractor shall submit the following items to the City:

A. Contractor shall submit his declaration under penalty of perjury stating that all workers and persons employed, all firms supplying the materials, and all subcontractors upon the project have been paid in full, and that there are no claims outstanding against the project for either labor or materials, except certain items, if any, to be set forth in detail in the declaration.

B. Contractor shall submit a complete and accurate set of as-built drawings prepared by the Contractor pursuant to section 4.06 hereof.

C. Contractor shall submit his guarantee pursuant to Article 26 hereof.

D. Contractor shall submit his warranty and maintenance bond, as provided in section 2.04 hereof, securing paid guarantee pursuant to Article 26 hereof.

E. Contractor shall submit proof acceptable to City of Proper release from all claims regarding patents and/or copyrights pursuant to section 6.09 hereof.

F. The contractor shall submit five (5) sets of description completely covering the operation and maintenance of the mechanical and electrical installation. The descriptions shall include charts, diagrams, performance curves, catalog information, lubrication manuals, and details pertaining to the functioning of various items of equipment. Such description shall be divided logically into "systems" on the basis of operation without respect to trades, subcontractors or arbitrary specifications sections. The relationship of the "systems" shall be clearly and concisely detailed.

Section 25.03. Project Manager's Final Estimate and Final Payment.

Upon receipt of the submittals required by this article, the Project Manager shall prepare an estimate of the sum due to Contractor. Said estimate shall take into account the contract price, as adjusted by any change orders; amounts already paid; and sums to be retained for incomplete work, liquidated damages, and for any other cause under the contract.

The Project Manager shall transmit the Final Estimate to the Contractor for approval. If both parties agree, the Project Manager, after verification of completion of work and receipt of a warranty bond, shall release the final payment less the retention amounts.

Acceptance by the Contractor of the final payment shall constitute a waiver by the Contractor of any additional right to compensation under or by reason of the

Contract, and the payment so accepted by the Contractor thereupon shall become a complete settlement between the City and the Contractor.

Section 25.04. Intentionally Left Blank.

Section 25.05. Recordation of Notice of Completion and Acceptance of Contract.

Acceptance of the work by the Director of Public Services and the recordation of a Notice of Completion shall be in the manner prescribed by law, provided that the work shall then be fully and satisfactorily completed and the provisions of the contract documents fully and satisfactorily performed in all respects. The City reserves all rights provided by law and/or the Contract Documents if the work is not fully satisfactory.

Section 25.06. Notice of Completion.

Within thirty-five (35) days after the recordation of the Notice of Completion, the City Clerk shall present proof of recordation of the Notice of Completion to the Project Manager.

Section 25.07. Retention Release.

Following receipt of said proof of recordation of the Notice of Completion from the City Clerk, the Project Manager shall issue the release of retention pursuant to the final engineer's estimate, less retentions due to stop notices as provided in section 25.08 below.

Section 25.08. Retentions for Stop Notices.

The City may, in its sole discretion, and at any time, retain out of any money due the Contractor any unpaid claims alleged in stop notices filed pursuant to Civil Code section 9000 et seq.

The City retains all remedies it may have in the event of a stop notice dispute, including the right to proceed with the stop notice procedure set forth in the Civil Code or to seek immediate judicial relief through the stop notice procedure or any other applicable judicial procedure.

The basic standard to determine a sufficient retention in the event of a stop notice shall be one hundred twenty-five percent (125%) of the total of all stop notices timely filed; provided, however, the City retains the right to retain different or greater sums should such retention become necessary in its discretion.

Section 25.09. Non-Waiver.

Neither acceptance of nor payment for the work or any part thereof, nor any extension of time, nor any possession taken by City shall operate as a waiver of any of the provisions of this contract, nor shall a waiver of any breach of this contract be held to be a waiver of any other or subsequent breach. In addition, recordation of a Notice of Completion shall not be deemed an acceptance of latent defects, nor shall it constitute a waiver of any of the provisions of this agreement.

ARTICLE 26. GUARANTEES.

Section 26.01. Guarantee Required.

In addition to any guarantees required elsewhere by the Contract Documents, the Contractor shall guarantee the work for a period of one (1) year from and after the recordation of the Notice of Acceptance. Such guarantee shall be made on the form provided, as set forth in section 26.02 below.

Such guarantee is in addition to, and not in lieu of, the City's rights to enforce this contract in all respects.

Section 26.02. Form of Guarantee.

The guarantee required by this article shall provide as follows:

> The _____ hereby unconditionally guarantees that work performed pursuant to _____
> _____
> [Project Description] has been done in accordance with the requirements of the contract therefor and further guarantees the work of the contract to be and remain free of defects in workmanship and materials for a period of one (1) year from the date of acceptance of the contract, unless a longer guarantee period is called for by the Contract Documents. The Contractor hereby agrees to repair or replace any and all work, together with any adjacent work which may have been damaged or displaced in so doing, that may prove to be not in accordance with the requirements of the contract or that may be defective in its workmanship or material within the guarantee period specified, without any expense whatsoever to the City of Colfax, ordinary wear and tear and unusual abuse and neglect only excepted. The Contractor has provided contract bonds which will remain in full force and effect during the guarantee period.

The Contractor further agrees that within ten (10) calendar days after being notified in writing by the City of Colfax, of any work not in accordance with the requirements of the contract or any defects in the work, he will commence and prosecute with due diligence all work necessary to fulfill the terms of this guarantee, and to complete the work within a reasonable period of time. In the event he fails to so comply, he does hereby authorize the City of Colfax to proceed to have such work done at the Contractor's expense and he will pay the cost thereof upon demand. The City shall be entitled to all costs, including reasonable attorneys' fees, necessarily incurred upon the Contractor's refusal to pay the above costs.

Notwithstanding the foregoing paragraph, in the event of an emergency constituting an immediate hazard to the health or safety of the employees of the City of Colfax, or its property or licensees, the City may undertake at the Contractor's expense without prior notice, all work necessary to correct such hazardous condition when it was caused by the work of the Contractor not being in accordance with the requirements of this contract, or being defective, and to charge the same to the Contractor as specified in the preceding paragraph.

The guarantee set forth herein is not intended by the parties, nor shall it be construed, as in any way limiting or reducing the City of Colfax's rights to enforce all terms of the contract referenced hereinabove or the time for enforcement thereof. This guarantee is provided in addition to, and not in lieu of, the City of Colfax's rights on such contract.

_____

CONTRACTOR'S SIGNATURE

(Corporate Seal)

ARTICLE 27. CITY'S RIGHT TO TERMINATE CONTRACT.

Section 27.01. Termination for Cause.

The City may terminate the contract, pursuant to the provisions of this article, for the following causes:

A. The Contractor has been adjudged bankrupt or has made a general assignment for the benefit of creditors, or that a receiver has been appointed on account of the insolvency of the Contractor.

B. If the Contractor or any of his subcontractors violate any of the provisions of the Contract Documents or fail to perform the work within the time specified in the

progress schedule approved by the City; except in cases for which extensions of time previously have been authorized.

C. If the Contractor or any of his subcontractors should fail to make prompt payment to subcontractors or materialmen for material or for labor.

D. If the Contractor or a subcontractor persistently disregards laws, ordinances, or the instructions of the City.

E. For failure by the Contractor to provide and keep in full force and effect all insurance required by Article 2 hereof, and to cause all subcontractors to so comply.

Section 27.02. Termination for Cause – Procedure.

Upon the certification of the Project Manager that sufficient cause exists to justify the termination, the City Council may, without prejudice to any other right or remedy of the City, give written notice to Contractor and his surety or sureties of its intention to terminate the contract.

Unless within seven (7) days of the giving of such notice, the Contractor shall cease such violation and make satisfactory arrangements for a correction thereof, the contract shall, upon the expiration of the said seven (7) days, cease and terminate.

In the event of any such termination, the City shall immediately give written notice thereof to the surety and to the Contractor and the surety shall have the right to take over and perform the contract; provided, however, that if the surety within fourteen (14) days after service of the notice of termination, does not commence performance of the contract, the City may take over the work and prosecute the same to completion by contract or by any other method it may deem advisable, for the account and at the expense of the Contractor, and the Contractor and his sureties shall be liable to the City for any excess costs occasioned by the City thereby. In such event, the City may, without liability, take possession of and utilize in completing the work, such material as may be on the site of the work and necessary therefor. In any such case, the Contractor shall not be entitled to receive any further payment until the work is finished.

Section 27.03. Reconstruction in the Event of Loss.

In the event of a partial or total destruction of any or all of the work or materials to be provided pursuant to this agreement, at any time prior to the final completion of the contract and the final acceptance thereof by the City, the Contractor promptly shall reconstruct, repair, replace, or restore, all work or materials so destroyed at no cost to the City.

Nothing herein provided shall in any way excuse the Contractor from the obligation of furnishing all the required materials and completing the work in full compliance with the terms of the Contract Documents; provided that a reasonable time extension shall be negotiated by the parties.

This section shall not apply if the destruction is by an "Act of God" as defined in Government Code section 4151(b).

Section 27.04. Option in Event of a Loss.

In the event that any destruction or loss should exceed twenty percent (20%) of the value of the construction completed to date, as determined at the end of the preceding month, or is due to an "Act of God" as defined above, the City shall have the option, at its sole discretion, to terminate this contract.

Section 27.05. Provisions for Termination of Contract.

This contract is subject to termination as provided by sections 4410 and 4411 of the Government Code, being portions of the Emergency Termination of Public Contracts Act of 1949.

Section 27.06. Termination for Convenience.

City may terminate this Contract at any time at its convenience by giving notice in writing to Contractor, which notice shall state that it is a notice of termination for the convenience of City and shall specify the effective date of termination. Contractor shall promptly submit its termination claim to City. The parties shall negotiate a just and equitable termination settlement to be paid Contractor, which shall be based on actual costs and expenses accrued to the express date of termination plus a reasonable termination fee in an amount not to exceed ten percent (10%) of such costs and expenses. Amounts previously paid to Contractor shall be credited against any amounts determined to be due to Contractor pursuant to this section. Upon receipt of the notice of termination, Contractor shall immediately cancel its outstanding orders for procurement of materials, supplies and other miscellaneous goods.

ARTICLE 28. ADDITIONAL PROVISIONS.

Section 28.01. Conflict of Interest.

No official of the City who is authorized on behalf of the City to negotiate, make, accept, or approve, any architectural, engineering, inspection, construction, or materials supply contract, or any subcontract in connection with the construction of the project, or any land acquisition in connection with the project, shall become directly or indirectly interested personally in this contract or in any part thereof.

No officer, employee, architect, attorney, engineer, or inspector of or for the City who is authorized on behalf of the City to exercise an executive, supervisory, or other similar function in connection with the construction of the project shall become directly or indirectly interested personally in this contract or any part thereof.

Section 28.02. Notices.

Any notice from one party to the other pursuant to the Contract Documents shall be in writing and shall be dated and signed by the party giving such notice or by a duly authorized representative of such party. Any such notice shall not be effective for any purpose whatsoever unless served in the following manner: If the notice is given to the Project Manager, it must be personally served at his offices, or by depositing the same in the United States mails in a sealed envelope, correct postage prepaid, and correctly addressed to the address shown in the instructions to the bidders.

To be effective, a copy of such notice shall also be served or mailed to the Project Manager at the address shown in the instructions to bidders.

If the notice is given to Contractor, it must be by personal delivery thereof to Contractor or to Contractor's superintendent at the site of the work, or by depositing the same in the United States mails, in a sealed envelope, addressed to the Contractor at the place designated in the bid by the Contractor for the receipt of correspondence.

If the notice is given to a surety of the Contractor, it must be by personal delivery to such surety or by depositing the same in the United States mails, in a sealed envelope, addressed to such surety or other person at the address last communicated by him to the City. Copies of all such notices shall be delivered to Contractor.

Section 28.03. No Verbal Agreements.

No verbal agreement or conversation with any officer, agent, or employee of the City, either before, during, or after the execution of the Contract Documents shall affect or modify any term or condition contained in the Contract Documents, nor shall such verbal agreement or conversation entitle Contractor to any additional payment or time to perform whatsoever under the terms of this agreement.

Section 28.04. Examination of Proposed Project Location and Contract Documents.

Contractor certifies and agrees that prior to bidding, he carefully examined the location of the project, that he carefully reviewed the Contract Documents, and that he is fully aware of all the work called for by the Contract Documents, the nature of the site, and the requirements of all specifications including these general conditions.

Section 28.05. Notice of Potential Claims; Appeal of the Determination of Claim.

The Contractor shall not be entitled to the payment of any additional compensation for any cause, including any act or failure to act, by the City or any of its officers, agents, or employees, or the happening of any event, thing or occurrence, unless the Contractor shall have given the City written notice of the potential claim as specified herein.

The written notice of claim shall set forth the reasons for which the Contractor believes additional compensation should be paid, a firm estimate or accounting of the cost involved, and, insofar as possible, the total amount of the claim.

Such notice must have been given to the City prior to the time that the Contractor shall have performed the work giving rise to the potential claim, if based on an act or failure to act by the City, or in all other cases within fifteen (15) days after the happening of the event, thing, or occurrence giving rise to the potential claim, or following service of the Project Manager's statement of final inspection. The Director of Public Services shall review the claim and all supporting information and documentation and render a decision in writing, setting forth the reasons and findings for the decision, to accept, accept in part, or deny the claim, within fifteen (15) days after receipt of the notice of claim.

It is the intention of this section that differences between the parties arising as a result of performance of the contract shall be brought to the attention of the City at the earliest possible time in order that such matters may be settled, if possible, or other appropriate action promptly taken. The Contractor hereby agrees that he shall have no right to additional compensation for any claim that may be based on any such act, failure to act, event, thing, or occurrence, for which no written notice of claim was filed as required by this section.

This section shall not supersede, but shall be superseded by, any provisions of these Contract Documents which specifically set forth the procedure for the Contractor to give notices of claims to the City in any particular case.

If the Contractor contests the decision of the Director of Public Services, the Contractor may appeal the decision to the City Manager. The contractor shall file the appeal with the City Clerk within seven (7) calendar days following receipt of the decision of the Director of Public Services. The appeal shall include a statement setting forth in detail all grounds alleged by the Contractor supporting their appeal of the Director's decision. Failure to file the appeal in a timely manner shall constitute a waiver and acceptance by the Contractor of the decision on the claim by the Director of Public Services. The decision of the City Manager on the claim shall be final.

Section 28.06. Anti-Trust Assignment.

By execution of the Contract Documents, or any subcontract awarded by the Contractor, the Contractor or any subcontractor offers and agrees to assign and hereby does assign to the City all rights, title, and interest in and to all causes of action such Contractor or subcontractor may have under section 4 of the Clayton Act (15 USC section 15) or under the Cartright Act (Chapter 2 of Part 2 of Division 7 of the Business and Professions Code, commencing with section 16700), arising from purchases of goods, services, or materials pursuant to this public works contract or subcontract. This assignment shall be made and shall become effective upon execution of the contract.

Section 28.07. Contractor Not Agent, Nor Employee.

Neither the Contractor nor any subcontractor, or any officer, agent, or employee of either, is, nor shall they represent themselves to be, an officer, agent, or employee of the City of Colfax for any purpose whatsoever.

No person employed by the Contractor, or by any subcontractors, are, nor shall they be construed to be in any manner or for any purpose whatsoever, employees of the City of Colfax.

PEDESTRIAN AND ADA IMPROVEMENTS TO COLFAX TRANSIT CENTER PROJECT
(EAST OAK STREET SIDEWALK IMPROVEMENTS)

SPECIAL PROVISIONS

AND

SPECIFICATIONS

SPECIAL PROVISIONS AND SPECIFICATIONS
FOR THE
PEDESTRIAN AND ADA IMPROVEMENTS TO COLFAX TRANSIT CENTER PROJECT
(EAST OAK STREET SIDEWALK IMPROVEMENTS)

TABLE OF CONTENTS

SCOPE OF SPECIAL PROVISIONS 1
DISCREPANCIES AND OMISSIONS 1
SECTION 4: SCOPE OF WORK 2
SECTION 5: CONTROL OF WORK 2
SECTION 6: CONTROL OF MATERIALS 4
SECTION 7: LEGAL RELATIONS AND RESPONSIBILITY 4
SECTION 8: PROSECUTION AND PROGRESS 7
SECTION 9: MEASUREMENT AND PAYMENT 9
SECTION 12: CONSTRUCTION AREA TRAFFIC CONTROL DEVICES 9
SECTION 15: EXISTING FACILITIES 14
SECTION 16: CLEARING AND GRUBBING 15
SECTION 17: WATERING 15
SECTION 19: EARTHWORK 16
SECTION 24: LIME STABILIZATION 16
SECTION 26: AGGREGATE BASES 16
SECTION 73: CONCRETE CURBS AND SIDEWALKS 16
SECTION 84: TRAFFIC STRIPES AND PAVEMENT MARKINGS 17
SECTION 85. PAVEMENT MARKERS 18
SECTION 90: PORTLAND CEMENT CONCRETE 19
SECTION 100. TEMPORARY PAVEMENT DELINEATION 51

SPECIAL PROVISIONS
FOR THE
CITY OF COLFAX

PEDESTRIAN AND ADA IMPROVEMENTS TO COLFAX TRANSIT CENTER PROJECT (EAST OAK STREET SIDEWALK IMPROVEMENTS)

SCOPE OF SPECIAL PROVISIONS

The work described in these Special Provisions shall be performed in conformance with the latest editions of the Placer County Standard Construction Specifications, Amendments to the 2006 Standard Specifications, 2006 Standard Special Provisions and Standard Plans, except insofar as these Special Provisions may modify them.

Numbering in these Special Provisions conforms to that in the State Standard Specifications. The existence of a Section in these Special Provisions means that the corresponding Section in the State Standard Specifications is modified in some respect. Unless otherwise specified, the modified State Standard Specification Provisions are deleted entirely, and the provisions of these Special Provisions are substituted.

The construction materials, payments, etc., for items of work shown in the proposal and on the plans, but not specifically mentioned in these Special Provisions are referred to the Standard Construction Specifications and State Standard Specifications for conformance.

DISCREPANCIES AND OMISSIONS

Any discrepancies or omissions found in the Contract Documents shall be reported to the Engineer immediately. The Engineer will clarify discrepancies or omissions, in writing, within reasonable time.

In resolving inconsistencies among two or more Sections of the Contract Documents, precedence shall be given in the following order:

Special Provisions

Placer County Standard Construction Specifications

State Standard Specifications and Amendments to the State Standard Specifications, Standard Special Provisions, and Plans

Drawings
Addenda shall take precedence over all Sections referenced therein. Figure dimensions on Drawings shall take precedence over general Drawings.

SECTION 4: SCOPE OF WORK

4-1.01 SUMMARY OF WORK

The project consists of installation of a sidewalk from the existing sidewalk located at the intersection of South Auburn Street and East Oak Street continuous to Railroad Street. The sidewalk project includes improved driveway access and installation of Hot Mix Asphalt (HMA) to join the existing pavement to the sidewalk project.

4-1.02 FINAL CLEANING UP

In addition to the requirements of Section 4-1.02 of the Standard Construction Specifications, the following shall apply:

The Contractor shall remove all temporary pavement delineation.

Prior to submitting the final payment request, the Contractor shall remove all reference markings (i.e. USA markings, striping reference points, utility reference points) placed during the course of work.

SECTION 5: CONTROL OF WORK

5-1.05 ORDER OF WORK

Order of work shall conform to the provisions in Section 5-1.05, "Order of Work", of the State Standard Specifications and these Special Provisions.

The Contractor shall prepare a traffic control plan that conforms to Section 12, Traffic Control Plan.

The work shall be performed in conformance with the phases of construction shown on the Contractor's Traffic Control Plan. Non-conflicting work in subsequent phases may proceed concurrently with work in preceding phases.

In each phase, the first order of work shall be the removal of existing pavement delineation. Pavement delineation removal shall be coordinated with new delineation, including temporary delineation, so that lane lines are provided at all times on traveled ways open to public traffic.

For Sidewalk Project Area:

1. Place and maintain Best Management Practices (BMP), the BMP's shall remain in place until final sweeping is completed and accepted.

2. Cut asphalt to achieve the required separation to construct the sidewalk.

3. Remove soils and place root barrier and aggregate base to achieve the necessary compaction requirements.

4. Form and poor sidewalk monolithically.

5. Install asphalt between existing street surface and new sidewalk.

5-1.07 LINES AND GRADES
The requirements specified in of the State Standard Specifications shall be replaced as follows:

The Contractor shall be responsible to provide all surveys to control the lines, elevations and dimensions of the work in conformance with the plans. Any deviation from the lines, elevations and dimensions shown on the plans must receive prior approval from the Engineer. Where new construction connects to existing facilities, the Contractor shall check and establish the exact location prior to construction of the facility.

The Contractor shall be responsible for the accuracy of his/her own layout work and shall be responsible and liable for the preservation of all established lines, grades and layout points. Stakes damaged or destroyed by the public or operations of the Contractor will be replaced at the Contractor's expense.

Full compensation for conforming to these requirements will be considered as included in the prices paid for the various contract items of work and no additional compensation will be allowed therefore.

5-1.08 INSPECTION
In addition to Section 5-1.08 of the State Standard Specifications, the following shall apply:

All work is subject to inspection and approval by the Engineer. The Contractor shall notify the Engineer, along with all affected utility companies, two (2) working days in advance of the start of work to coordinate and schedule inspection staff.

The City will provide inspection on an 8-hour day and 40-hour week basis only excluding designated City, State, or Federal holidays. The Contractor shall reimburse the City in the amount of $150.00 per hour for the actual cost of all inspection in excess of 8 hours per day, or 40 hours per week, or inspection performed during designated City, State, or Federal holidays. Designated City holidays are listed in Section 8-1.04A "Construction Working Hours."

The Contractor shall provide a competent person during normal working hours to assist the Engineer, when required, in checking the Contractor's layout and for measuring quantities for payment purposes. The Contractor shall cooperate with the Engineer so that checking and measuring may be accomplished with the least interference to the Contractor's operations.

No additional compensation will be made to the Contractor for fulfilling these requirements.

5-1.116 DIFFERING SITE CONDITIONS
In addition to Section 5-1.116 of the State Standard Specifications, the following shall apply:

During the progress of the work, if material is discovered that the Contractor believes may be material that is hazardous waste, as defined in Section 25117 of the Health and Safety Code, that is required to be removed and disposed at a Class I, Class II, or Class III disposal site in accordance with provisions of existing law, the party discovering such conditions shall promptly notify the other party in writing before conditions are disturbed and before the affected work is performed.

Full compensation for conforming to all requirements specified in this Section, "Control of Work," shall be considered as included in the contract price paid for other items of work and no additional compensation will be allowed.

SECTION 6: CONTROL OF MATERIALS

6-3.01 TESTING

In addition to the requirements of Section 6-3.01 of the Standard Specifications, the following shall apply:

Material testing for this project will be provided by the Contractor as set forth in Section 6 of the Standard Specifications and the most current Placer County's Quality Assurance Program. The Contractor shall perform all testing to verify compliance with the Specifications of any and all materials furnished by the Contractor. The Contractor shall submit and receive the Engineer's approval of all compliance test results prior to incorporating materials into the project. The Contractor may elect to place material without the approved certificates of compliance and mix designs and shall be at the Contractor's own risk.

Samples, certificates of compliance, lists of materials and material sources, access to facilities, requests for testing and all other data relating to material testing shall conform to Section 6 of the Standard Specifications, "Control of Materials." Contractor shall provide the Engineer with five (5) working days' notice of the need for material testing.

Full compensation for conforming to all requirements specified in this Section, "Control of Materials," shall be considered as included in the contract price paid for other items of work and no additional compensation will be allowed.

SECTION 7: LEGAL RELATIONS AND RESPONSIBILITY

7-1.01G WATER POLLUTION

In addition to the requirements of Section 7-1.01G of the State Standard Specifications, Best Management Practices (BMP) devices conforming to those shown within the City of Roseville's Storm Quality BMP Guidance Manual for Construction. You will find this information at the following website: (http://www.roseville.ca.us/civicax/filebank/blobdload.aspx?blobid=10580). BMP's shall remain in place during the full construction processes, plastic and or roofing paper is not acceptable to be used for drainage covers.

Full compensation for conforming to the requirements of this Section shall be considered as included in the prices paid for lump sum of BMP Placement and Maintenance and shall include materials, application of the materials, maintenance, including labor, equipment, tools and incidentals for this item of work and no additional compensation will be allowed therefor.

7-1.01I SOUND CONTROL REQUIREMENTS

In addition to the requirements of Section 7-1.01I of the State Standard Specifications, noise level requirements shall apply to all equipment used on the project including, but not limited to, trucks, transit mixers or transient equipment that may not be owned by the Contractor. The use of loud signals shall be avoided in favor of light warnings except those required by safety laws for the protection of personnel.

The noise level from the Contractor's operations, between the hours of 9:00 p.m. and 7:00 a.m., shall not exceed 86 dbA at a distance of 50 feet.

Full compensation for conforming to the requirements of this Section shall be considered as included in the prices paid for the various contract items of work involved and no additional compensation will be allowed therefore.

7-1.04 PERMITS AND LICENSES

In addition to the requirements of Section 7-1.04 of the State Standard Specifications, the Contractor shall obtain a business license from the City of Colfax prior to performing the work.

The Contractor may use water from City of Colfax fire hydrants provided that the required permits are obtained from **Placer County Water Agency** and the Contractor has paid the associated fees.

Full compensation for conforming to the requirements of this Section shall be considered as included in the prices paid for the various contract items of work involved and no additional compensation will be allowed therefore.

7-1.08 PUBLIC CONVENIENCE

The Contractor shall be responsible to notify and coordinate their schedule with schools that may be in or adjacent to the projects area. In addition, the Contractor shall notify all residents that will be impacted by the project and coordinate their schedule in an effort to minimize inconvenience.

Full compensation for conforming to the requirements of this Section shall be considered as included in the prices paid for the various contract items of work involved and no additional compensation will be allowed therefore.

7-1.09 PUBLIC SAFETY

In addition to the requirements of Section 7-1.09 of the State Standard Specifications, the Contractor shall cooperate with and notify the local police and fire departments, school districts, Refuse, ambulance services, and Public Works Division of proposed construction operations two (2) days before work is to begin.

The Contractor shall be responsible to notify and coordinate their schedule with schools that may be in or adjacent to the projects area.

Full compensation for conforming to the requirements of this Section shall be considered as included in the prices paid for the various contract items of work involved and no additional compensation will be allowed therefore.

7-1.14 COOPERATION

In addition to the requirements of Section 7-1.14 of the State Standard Specifications, the Contractor shall cooperate with other forces constructing, relocating, and/or modifying facilities within the project limits. The Contractor shall coordinate his work with that of others, including utility companies, to prevent delays.

It is understood and agreed that the Contractor has considered in his bid all of the permanent and temporary utility appurtenances in their present and/or relocated positions as shown on the plans or as described in the specifications, and that no additional compensation will be allowed for any delays, inconvenience, or damages sustained due to any interference from said appurtenances or the operation of moving them. In addition, the Contractor shall not be allowed any additional compensation for delays of

inconvenience sustained by the Contractor due to the City not having City-supplied equipment ready for pick-up. In such a case, the City may increase the number of working days for the contract.

Five (5) days prior to beginning work, the Contractor shall provide to the Engineer, in writing, the name and telephone number of a representative who is directly involved with this project, and under the supervision of the Contractor. The Contractor's representative may be contacted by City staff during non-working hours including nights, weekends and holidays in the case of any public inconvenience and/or emergency relating to the Contractor's operations. The contact representative shall not be replaced by another company employee for the duration of the project without a written explanation from the Contractor which has been approved by the Engineer. Should a new representative be used, he/she shall be knowledgeable of the project, the events, and/or revisions that may be occurring.
Full compensation for conforming to the requirements of this Section shall be considered as included in the prices paid for the various contract items of work involved and no additional compensation will be allowed therefore.

7-1.19 RIGHTS IN LAND AND IMPROVEMENTS
In addition to the requirements of Section 7-1.19 of the State Standard Specifications, the Contractor is responsible for making arrangements to stock-pile and store equipment outside the public right of way as work is performed. Personal vehicles of the Contractor's employees shall not be parked on the traveled way or shoulders, private property, including any Section closed to public traffic.

The Contractor shall secure easements at their own expense for any areas required for plant sites, storage of equipment or materials, or for any other purposes. Before occupying any easement area, the Contractor shall provide the Engineer a written statement from each property owner verifying easement acquisition.

Staging areas located on private property shall be restricted to properties where the property owner has given written authorization to the Contractor for use of said property. The Contractor shall submit, at the Pre-Construction meeting, documentation of the written authorization from the property owner(s). Prior to final acceptance of the project, the Contractor shall provide the Engineer a written statement of release from each property owner that granted an easement for the Contractor's operations.

Full compensation for conforming to all requirements specified in this Section, "Legal Relations and Responsibility," shall be considered as included in the contract price paid for other items of work and no additional compensation will be allowed.

SECTION 8: PROSECUTION AND PROGRESS

8-1.01 SUBCONTRACTING

In addition to the requirements of Section 8-1.01 of the State Standard Specifications, and in accordance with the requirements of Section 4100 to 4113, inclusive, of the Government Code, each bidder shall list in his proposal the name and business address of each Subcontractor to whom the bidder proposes to subcontract all or a portion of the work. Said list shall include a description of the portion of the work which will be done by each Subcontractor. A sheet for listing the Subcontractor's, as required, is included in the proposal.

8-1.03 BEGINNING OF WORK

The Notice to Proceed will be issued when the following conditions are met:
The Contractor satisfies the requirement set forth in the provisions.

Preconstruction Conference -- Prior to the start of construction, a preconstruction conference will be called by the Engineer for the purpose of discussing with the Contractor the scope of work, contract drawings, specifications, existing conditions, materials to be tested, equipment to be used, and all essential matters pertaining to the prosecution and the satisfactory completion of the project as required. The Contractor's representative at this conference shall include all major superintendents for the work and may include major subcontractors and material suppliers.

The Contractor shall be responsible to coordinate utilities relocations within the project area. Coordination of utilities within the project limits, including relocations and maintenance of existing facilities and additions thereto, shall be confirmed in writing by utility representatives and the Contractor at this conference or within five (5) working days thereafter.

8-1.04 PROGRESS SCHEDULE

In addition to Section 8-1.04 of the State Standard Specifications, the Contractor shall submit a progress schedule to the Engineer at the pre-construction meeting. The progress schedule shall state the street name, the anticipated start and completion dates and the type of construction operation anticipated for each street. Work that exceeds the stated completion date shall be understood as being out of conformance with the progress schedule and these Special Provisions. The Contractor shall submit a revised progress schedule within 5 working days of the Engineer's written request.

Strict conformance to the progress schedule shall be maintained and revisions to the progress schedule may be allowed only upon written approval of the Engineer.

Scheduling of change orders or extra work orders is the responsibility of the Contractor. The Contractor shall revise the schedule to incorporate all activities involved in completing the change orders or extra work order and submit it to the Engineer for review and approval. With the concurrence of the Engineer, change or extra work orders of a magnitude less than $500 do not need to be scheduled, unless the order affects the project schedule or other outside parties.

If the Engineer finds the Contractor is entitled to an extension of any completion date under the provisions of the contract the Engineer's determination of the total number of days extension will be based upon the current analysis of the schedule and upon data relevant to the extension.

Full compensation for conforming to the requirements of this Section shall be considered as included in the prices paid for the various contract items of work involved and no additional compensation will be allowed therefore.

8-1.04A CONSTRUCTION WORKING HOURS

The construction working hours shall be 7:30 AM to 5:30 PM Monday to Friday in the residential neighborhoods.

Requests for authorization to perform work outside the hours listed above shall be made in writing at least 72 hours in advance.

Designated City holidays are: New Year's Day (January 1st), Martin Luther King Day (third Monday in January), President's Day (third Monday in February), Memorial Day (last Monday in May), Independence Day (July 4th), Labor Day (first Monday in September), Veteran's Day (November 11th), Thanksgiving Day (fourth Thursday in November), day after Thanksgiving Day (fourth Friday in November), Day after Thanksgiving Day, Christmas Eve (December 24th) and Christmas Day (December 25th). When a designated holiday falls on a Saturday or Sunday, the preceding Friday or following Monday (respectfully) shall be a designated holiday.

8-1.06 TIME OF COMPLETION

In addition to Section 8-1.06 of the State Standard Specifications, the Contractor shall diligently prosecute the work to completion in accordance with the following schedule.

All work shall be completed within the time designated in Notice and Information to Bidders, Section 20.

A punch list will be created after all bid items have been completed by the Contractor and it shall be the Contractor's responsibility to notify the Engineer in writing that all bid items have been completed. All punch list items shall be completed within the specified contract working days. The project will not be accepted until all punch list items have been completed.

8-1.08 TERMINATION OF CONTROL

In addition to the requirements of Section 8-1.08 of the State Standard Specifications the Contractor is responsible for all material and/or equipment necessary to perform the project as specified. Should the City have to supply the Contractor with time, material, or equipment to complete work beyond that which is specified herein, the Contractor shall be billed accordingly.

SECTION 9: MEASUREMENT AND PAYMENT

9-1.01 MEASUREMENT OF QUANTITIES

In addition to the requirements of Section 9-1.01 of the State Standard Specifications, the following shall apply:

Payment for all work bid at a price per unit of measurement will be based upon actual quantities of work as measured upon completion. The City does not expressly or by implication agree that the actual amount of work or materials of any class will correspond to the estimated quantities given in the proposal. The Contractor shall make no claim for anticipated profits, or loss of profit, for damages, or for any extra payment whatever because of any difference between the amount of work actually done or materials furnished and the estimated amount.

9-1.02 SCOPE OF PAYMENT

In addition to Section 9-1.02 of the State Standard Specification, the items bid on a “lump sum” basis shall result in a complete structure, operating plant, or system, in satisfactory working condition in respect to the functional purpose of the installation and no extra compensation will be allowed for anything omitted but fairly implied. Full compensation for additional materials and labor, whether or not shown on the drawing or specified in the State Standard Specifications or these Special Provisions, which are necessary to complete all the work will be considered as included in the lump sum price paid for the work, and no additional compensation will be allowed.

SECTION 12: CONSTRUCTION AREA TRAFFIC CONTROL DEVICES

12-1.01A TRAFFIC MAINTENANCE

Attention is directed to Sections 7-1.08, "Public Convenience," 7-1.09, "Public Safety," and 12, "Construction Area Traffic Control Devices," of the State Standard Specifications and to the Section entitled "Public Safety" elsewhere in these Special Provisions. Nothing in these Special Provisions shall be construed as relieving the Contractor from the responsibilities specified in Section 7-1.09.

The minimum size specified for Type II flashing arrow signs in the table following the second paragraph of Section 12-3.03, "Flashing Arrow Signs," of the State Standard Specifications is amended to read "36 inches by 72 inches".

In the Standard Plans, Note 10 on Standard Plan T10, Note 9 on Standard Plan T10A, Note 5 on Standard Plan T11, Note 6 on Standard Plan T12, Note 5 on Standard Plan T13, and Note 4 on Standard Plan T14 are revised to read:

> *All traffic cones used for night work or remaining in the roadway overnight shall have reflective cone sleeves as specified in the specifications.*

Section 12-3.10, "Traffic Cones," of the State Standard Specifications are amended to read:

> *During the hours of darkness traffic cones shall be affixed with reflective cone sleeves. The reflective sheeting of sleeves on the traffic cones shall be visible at 1,000 feet at night under illumination of legal high beam headlights, by persons with vision of or corrected to 20/20.*
>
> *Reflective cone sleeves shall conform to the following:*

1. *Removable flexible reflective cone sleeves shall be fabricated from the reflective sheeting specified in the Special Provisions, have a minimum height of 13 inches and shall be placed a maximum of 3 inches from the top of the cone. The sleeves shall not be in place during daylight hours.*

2. *Permanently affixed semitransparent reflective cone sleeves shall be fabricated from the semitransparent reflective sheeting specified in the Special Provisions, have a minimum height of 13 inches, and shall be placed a maximum of 3 inches from the top of the cone. Traffic cones with semitransparent reflective cone sleeves may be used during daylight hours.*

3. *Permanently affixed double band reflective cone sleeves shall have 2 white reflective bands. The top band shall be 6 inches in height, placed a maximum of 4 inches from the top of the cone. The lower band shall be 4 inches in height, placed 2 inches below the bottom of the top band. Traffic cones with double band reflective cone sleeves may be used during daylight hours.*

The type of reflective cone sleeve used shall be at the option of the Contractor. Only one type of reflective cone sleeve shall be used on the project.

The C16 and C17 designations of the signs shown on the detail "Entrance Ramp Without Turning Pockets" of Standard Plan T14 are amended to designate the signs as R16 and R17, respectively.

The Contractor shall be responsible for informing the public of the traffic conditions existing within the construction area at all times by placement of appropriate warning and advisory signs. The Contractor shall provide and maintain all traffic control and safety items. The Contractor assumes sole and complete responsibility for job and site conditions during the course of construction, including safety of all persons and property. This requirement shall apply continuously 24 hours/day and shall not be limited to normal working hours.

12-1.02 TRAFFIC CONTROL PLAN

At the pre-construction meeting, the Contractor shall submit a traffic control plan showing traffic control measures and/or, if approved, detours for vehicles and pedestrians affected by the construction work. A maximum of five (5) working days will be required to review and provide the Contractor with comments on the plan. The Contractor shall revise the plan per the City's comments until the plan is accepted by the Engineer. The Contractor will not be allowed to begin work until the Engineer has accepted the traffic control plan.

The Traffic Control Plan shall cover all stages of work, per site, and include (but not limited to) the following information and detail: (1) Street closures and detours; (2) construction, warning, detour and restriction signs, including "No Parking", “Loose Gravel”, “Construction Area Speed limit Signs,” and “Bump Ahead” signs; (3) temporary striping and pavement markers; (4) barricades; (5) flashing arrow signs; (6) lighted message boards; (7) portable delineators; (8) traffic cones; (9) lights, flares, flaggers, and spacings.

A copy of the accepted Traffic Control Plan must be kept at the job site at all times.

Temporary lane closures will be allowed only during approved working hours. Contractor shall provide at least one lane in each direction on all existing streets throughout the construction project unless otherwise approved in writing by the Engineer.

The Contractor shall cooperate with and notify the local police and fire department, ambulance services, post office, refuse collectors, Schools and School Districts, Placer County Transit, and residents of proposed construction operations and traffic control operations a minimum of five working days before work is to begin in each work area. **If changes are made to the traffic control plan, Contractor shall re-notify at least two working days before work is to begin.** In addition, the Contractor shall make available a 24-hour telephone number in case of emergencies and/or problems.

The Contractor will be responsible for notifying residents and businesses of the proposed construction. Notifications shall be distributed to residents and businesses impacted by the construction project.

The first phase notifies the affected residents and businesses of the upcoming construction through the use of "door hanger" type formatted notifications. The notification shall state the street name, the working hours, and the anticipated begin and completion dates for each street. The Contractor shall distribute the door hanger notifications a minimum of 5 (five) working days in advance of work. At the pre-construction meeting, Contractor shall provide the Engineer a copy of the proposed notification letter for acceptance.

Notifications shall be tucked neatly in doorjambs, handles, or partially under mats. Notifications shall not be glued, stapled, tacked, or otherwise attached to property. The Contractor shall take care to stay on designated walkways during delivery of notifications, and be polite to citizens encountered.

The second phase consists of the Contractor posting "No Parking" signs on barricades 48 hours prior to the project area and on arterial streets that allow parking. The "No Parking" signs shall also include the exact working day that the resurfacing work will take place. A warning indicating that vehicles will be towed away at the owner's expense shall also be included on the "No Parking" signs. In addition, the Contractor shall make available a 24-hour telephone number in case of emergencies and/or problems and shall post the telephone number on the "No Parking" signs. At the pre-construction meeting, Contractor shall submit to the Engineer a sample "No Parking" sign for acceptance. The Contractor shall be responsible for placing temporary "No Parking" signs in advance of any construction activity. Barricades shall be placed a maximum of 500 feet apart, on both sides of the affected street. At the pre-construction meeting, Contractor shall provide the Engineer a copy of the proposed notification "No Parking" for acceptance.

The Contractor shall be responsible for placing "Construction Speed Limit" signs on both sides of the affected street one (1) hour prior to the Street being opened to traffic. The speed limit for the "Construction Speed Limit" signs cannot be less than 10 mph below the posted speed. At the pre-construction meeting, Contractor shall submit to the Engineer a sample "Construction Speed Limit" sign for acceptance. Signs shall be placed a maximum of 500 feet apart, on both sides of the affected street.

Emergency access to driveways, intersections, business driveways and residential streets shall be maintained at all times. If vehicles are parked in the working area, the Contractor shall not attempt to move the vehicle. The Contractor shall notify the Engineer immediately, and the Engineer shall make proper arrangements to remove the vehicle.

Lane and street closure shall not be allowed without proper advance warning devices, signing and flag persons in conformance with the State Standard Specifications and these Special Provisions. At the completion of each working day, all lanes of traffic shall be open to the public. Street closure shall not be allowed on schedule refuse collections days.

No separate payment will be made for any item of Traffic Control and Maintenance set forth in the State Standard Specifications to be paid for as extra work. Full compensation for all Traffic Control and Maintenance shall be included in this bid item.

The provisions in this section will not relieve the Contractor from his/her responsibility to provide such additional devices or take such measures as may be necessary to comply with the provisions in Section 7-1.09, "Public Safety," of the State Standard Specifications.

12-1.03 TRAFFIC CONTROL

Traffic Control shall include all labor, tools, equipment and materials required to provide, maintain, and remove all signage, flagmen, temporary barricades, and appurtenances to provide traffic control within the project limits as set forth in the State Standard Specifications, California Manual on Uniform Traffic Control Devices (CAMUTCD), these Special Provisions, and as directed by the Engineer.

The Contractor shall have on their payroll a competent person responsible for all traffic control required for this project. The person shall be on site at all times whenever traffic control is in effect. Contractor shall identify this person at the pre-construction meeting.

Should the Contractor decide to subcontract the traffic control portion of this project, the Sub-Contractor shall be available as previously described. In addition, the Contractor shall also appoint a person to oversee the traffic control operations. The Contractor's appointee shall be available and responsible to implement the necessary traffic control plan according to the accepted traffic control plan and the latest edition of the California Manual on Uniform Traffic Control Devices (CAMUTCD).

Any vehicle used to place, maintain, or remove components of a traffic control system on multilane highways at night shall be equipped with a Type II flashing arrow sign which shall be in operation at all times while the vehicle is being used for placing, maintaining, or removing said components. The sign shall be controllable by the operator of the vehicle while the vehicle is in motion.

During the working hours as set forth above, the Contractor may, with the Engineer's approval, close one of the traffic lanes in each direction of existing four lane and six lane roads, to perform the required work. Lane closure shall not be allowed without proper advance warning devices and signing, and flag person control in conformance with the State Standard Specifications, and these Special Provisions. The Engineer shall be the sole judge of the spacing, length, and sequence of the lane closure areas. At the completion of each working day, all existing lanes of traffic shall be maintained open to traffic and temporary traffic markers shall be placed (if necessary). Provisions must be made for the uninterrupted passage of emergency vehicles through the project limits at all times, regardless of controlled traffic conditions existing at the time.

If any component in the traffic control system is displaced, or ceases to operate or function as specified, from any cause, during the progress of the work, the Contractor shall immediately repair said component to its original condition or replace said component and shall restore the component to its original location.

If there is a discrepancy and or the traffic control plan submitted and approved by the City is not followed in the construction zone the Contractor shall correct the discrepancy within one hour. If this is not mitigated the Contractor will stop work as directed by the Engineer.

The Contractor shall cooperate and allow the City work crews to use the traffic control system when set up for the Contractor's work. The Contractor is not obligated to maintain the traffic control system beyond his/her scheduled activities.

Full compensation for complying with the above requirements shall be considered as included in the contract price paid for Traffic Control and Maintenance and no additional compensation will be allowed.

At all intersections, the Contractor shall provide a minimum of 2 certified flaggers per intersection while the intersections are in red flash, as determined by the Engineer.

12-2.02 FLAGGING COSTS

This section of the State Standard Specifications has been deleted.

12-3.06 CONSTRUCTION AREA SIGNS

In addition to Section 12-3.06 of the State Standard Specifications, construction area signs shall be furnished, installed, maintained, and removed when no longer required in accordance with the provisions in Section 12, "Construction Area Traffic Control Devices," of the State Standard Specifications and these Special Provisions.

All excavations required to install construction area signs shall be performed by hand methods without the use of power equipment, except that power equipment may be used if it is determined there are no utility facilities in the area of the proposed post holes.

Full compensation for Construction Area Signs shall be considered as included in the contract lump sum price paid for Traffic Control Plan and Maintenance and no additional compensation will be allowed.

12-4.01 MEASUREMENT AND PAYMENT

Section 12-4.01 of the State Standard Specifications has been amended to read as follows:

Notwithstanding any provisions of the State Standard Specifications and Special Provisions to contrary, the contract lump sum price for “Traffic Control and Maintenance” will constitute full compensation for furnishing, installing, and removing traffic control devices, including signs, covers, lights, flares, cones, barricades, flagmen, and other items necessary for the safety, sole convenience, and direction of public traffic through and around the work area, as specified in the State Standard Specifications, these Special Provisions, and as directed by the Engineer.

The provisions in this section will not relieve the Contractor from his responsibility to provide such additional devices or take such measures as may be necessary to comply with the provisions in Section 7-1.09, "Public Safety," of the State Standard Specifications.

Full compensation for conforming to all requirements specified in this section shall be considered as included in the contract lump sum price paid for “Traffic Control and Maintenance” and no additional compensation will be allowed.

SECTION 15: EXISTING FACILITIES

15-1.01A PROTECTION OF ROADWAY FACILITIES

It shall be the responsibility of the Contractor to protect existing roadway facilities (including but not limited to culverts, manholes, monuments, railings, signs, traffic signal detectors, and other roadway appurtenances). Facilities damaged due to the Contractor's operations shall be repaired or replaced, as directed by the Engineer, at the Contractor's expense.

In the event that a sign is knocked down or street maintenance type work is required in the City of Colfax, the Contractor shall immediately call the On-call at (530) 308-7991 during non-business hours so a repair crew can be dispatched.

Nothing herein shall be construed as relieving the Contractor of his/her responsibility for final cleanup of the site as provided in the Section 4-1.02, "Final Cleaning Up" of the State Standard Specifications.

The Contractor shall be responsible for limiting the “tracking” of material off of the project site. The Contractor will, at the discretion of the Engineer, be required to sweep or wash the street/sidewalk to remove the material. The Contractor shall submit to the Engineer the proposed haul route to each jobsite two working days prior to starting work.

Full compensation for complying with the requirements of “Protection of Roadway Facilities” shall be considered as included in the prices paid for various contract items of work involved, and no additional compensation will be allowed therefore.

15-1.02 PRESERVATION OF PROPERTY

In addition to Section 15-1.02 of the State Standard Specifications, all existing utilities are to remain in service during construction. The Contractor shall be required to work around existing utility poles that will remain. The Contractor shall also be required to work around existing utility poles that are not within the actual pavement sections. Minor changes in alignment of slopes shall be made to avoid direct conflict that will interfere with the intended purpose of the facility.

Full compensation for conforming to the requirements of this Section shall be considered as included in the prices paid for the various contract items of work involved and no additional compensation will be allowed therefore.

15-1.03 UNDERGROUND FACILITIES

The Contractor shall notify Underground Service Alert (USA) at (800) 642-2444 at least 72 hours in advance of beginning work on the project. The Contractor is cautioned that there are underground and overhead utility facilities within the work area including telephone, electrical, cable television, gas, water and sanitary sewer transmission facilities, and storm drainage collection facilities.

The scope of this project is not anticipated to interfere with existing underground or overhead utilities. Consequently, the locations of existing utilities are not shown on the plans. However, the Contractor shall take notice of existing utility covers and trench lines. The Contractor shall use extreme caution when excavating, raising manholes, and paving in the vicinity of such facilities.

The Contractor shall visit the site of the proposed work and determine the quantity and location of the manholes, valve covers and utility appurtenances to be encountered in the proposed work area and his/her

bid accordingly. Damage to such utilities resulting from the Contractor's operations to complete the project shall be repaired at the Contractor's expense.

Where possible conflicts exist, the Contractor shall verify the grade and location of existing underground utilities by careful hand digging prior to beginning work. In the event the Contractor discovers existing utilities within the limits of the excavation, the Contractor shall immediately notify the Engineer and the affected utility owner by the most reasonable expeditious method and later confirm in writing. All required relocation of existing facilities that interfere with the work shall be made by the owning agencies.

Full compensation for conforming to the requirements of this Section shall be considered as included in the prices paid for the various contract items of work involved and no additional compensation will be allowed therefore.

SECTION 16: CLEARING AND GRUBBING

16-1.01 DESCRIPTION

In addition to Section 16-1.01 of the State Standard Specifications, this work shall include saw cutting, removal and disposal of asphalt concrete pavement, concrete curb, irrigation pipes and sod located within the project area. The Contractor shall clear and grub trees, grass, vegetation and other debris as required where excavation and/or placement of fill are required. The Contractor shall confine demolition and clear and grub activities within the areas shown on the Project Plans, and shall ensure that no damage to neighboring structures or facilities occurs.

16-1.02 REMOVAL AND DISPOSAL OF MATERIALS

In addition to Section 16-1.04 of the State Standard Specifications, the Contractor may be required to remove and dispose of materials and construction debris including concrete, asphalt, tree roots, aggregate base, vegetation and unsuitable materials from the construction areas to a landfill site approved by the Engineer. The disposal of such materials shall conform to all local ordinances and regulations of the City of Colfax and the County of Placer relating to land grading, flood plains, drainage facilities and disposal of surplus materials. All other costs, charges and fees associated with such disposal shall be borne by the Contractor. Surplus materials are not to be confused with salvaged material, which shall remain the property of the City.

Full compensation for conforming to all requirements specified in this section, “Clearing and Grubbing,” shall be considered as included in the contract prices paid for other items of work and no additional compensation will be allowed.

SECTION 17: WATERING

17-1.01 WATER SUPPLY

In addition to the requirements of Section 17-1.01 of the State Standard Specifications, water for dust control and other operations of this contract may be furnished from available fire hydrants. The Contractor shall apply with Placer County Water Agency (PCWA) for a Hydrant Permit and pay associated fees for each fire hydrant used.

SECTION 19: EARTHWORK

19-1.01 DESCRIPTION
In addition to the requirements of Section 19-1.01 of the State Standard Specifications, the following shall apply:

The Contractor shall perform all excavation required for the complete project, to the lines and grades as shown on the Project Plans, as described in these Special Provisions, and as directed by the Engineer.

SECTION 24: LIME STABILIZATION

The Standard Specifications are incorporated herein by this reference, except as noted:

24-1.08 FINISH ROLLING AND GRADING
The finished surface of the lime stabilized material shall be the grading plane and at any point shall not vary more than 0.00-foot above or 0.08-foot below the grade established by the Engineer.

If the compacted material is above the grade tolerances specified in this section, the excess material shall be trimmed, removed, and disposed of. No loose material shall be left on the finished plane. Trimming of excess material shall not be conducted unless finish rolling can be completed within 2 hours after trimming.

Trimmed surfaces shall receive finish rolling consisting of at least one complete coverage with steel drum or pneumatic-tired rollers. Vibratory rollers will not be allowed. Minor indentations may remain in the surface of the finished material after final trimming and rolling. Under no circumstances will it be permissible to add new or trimmed lime stabilized material to fill low areas or to raise the grade of compacted lime stabilized material.

SECTION 26: AGGREGATE BASES

The Standard Specifications are incorporated herein by the following reference, except as noted:

26-1.05 COMPACTING
Aggregate bases, after compaction, shall be watered in conformance with the provisions in Section 17, "Watering."

The relative compaction of each layer of compacted base material shall be not less than 95 percent. The surface of the finished aggregate base at any point shall not vary more than 0.00-foot above or 0.05-foot below the grade established by the Engineer.

Base which does not conform to the above requirements shall be reshaped or reworked, watered and thoroughly recompacted to conform to the specified requirements.

SECTION 73: CONCRETE CURBS AND SIDEWALKS

The Standard Specifications are incorporated herein by this reference, except as noted:

73-1.05 EXPANSION AND WEAKENED PLANE JOINTS

Expansion Joints Expansion Joints shall be constructed as shown on the approved plans or as specified herein. Transverse expansion joints of an approved type 0.5- inch wide shall be installed to the full depth of the placed concrete sidewalk, curb or gutter. These joints shall be placed at a maximum of 24-foot intervals or at the location where every 4th weakened plane joint would be required by the criteria set forth in the Weakened Plane Joint section. Additionally, expansion joints shall be located at all curb returns and other transition points.

Joint filler shall be installed to the full depth of the expansion joint and shall completely fill the entire constructed joint. In areas where existing sidewalks are being replaced and where obstacles such as utility poles extend through the walkway, the Engineer may require joint filler to be placed at the contact point between the new walkway and the obstacle.

Weakened Plane Joints Weakened Plane Joints shall be constructed as shown on the approved plans or as specified herein. Weakened plane joints shall be constructed with a concrete tool 1-1/2 inches deep in all concrete sidewalks, curbs and gutters prior to finishing work and marked. At final finishing, the finished joints shall be completed using an appropriate concrete tool to create a rounded mark not to exceed ½-inch in depth at the location of the marked joint.

These joints shall be placed at intervals no greater than 6-feet apart. In areas where the sidewalk is less than 6-feet wide, the joints shall be located a distance apart equal to the width of the sidewalk or as approved by the Engineer.

SECTION 84: TRAFFIC STRIPES AND PAVEMENT MARKINGS

84-1.01 DESCRIPTION

In addition to the requirements specified in this section, traffic stripes and pavement markings shall be installed per provisions in Section 84 of the Placer County Construction Standards.

Contractor shall remove all existing striping and pavement markers within the project limits.

Before obliterating any pavement delineation, the alignment and location of the pavement delineation shall be referenced by the Contractor with a sufficient number of control points to reestablish the alignment and location. The references shall also include the limits or changes in striping pattern, including limit lines, crosswalks and other pavement markings.

Traffic stripes and pavement markings shall be replaced at all locations where existing traffic stripes and pavement markings are obliterated or covered as a result of asphalt resurfacing operations.

Unless otherwise noted on the plans, the Contractor shall replace all pavement delineation on the same alignment and location.

84-2 THERMOPLASTIC TRAFFIC STRIPES AND PAVEMENT MARKINGS

84-2.01 DESCRIPTION

This work shall consist of furnishing and applying thermoplastic traffic stripes and pavement markings, including glass beads.

84-2.05 MEASUREMENT
The Contractor shall be responsible for removal and establishing alignment of all Pavement Traffic Stripes and Pavement Markings outlined on the plans.

84-2.06 PAYMENT
Full compensation for conforming to all requirements specified in thermoplastic traffic stripes and pavement markings shall be paid for at the contract lump sum price paid for "Install Thermoplastic Pavement Striping and Markings, and Pavement Markers," and "Remove Existing Pavement Striping."

The contract price paid for lump sum price paid for thermoplastic traffic stripes and pavement markings shall be paid for with "Thermoplastic Pavement Striping and Markings, and Pavement Markers" shall include full compensation for furnishing all labor, materials, tools, equipment, and incidentals, and for doing all the work involved in, applying thermoplastic traffic stripes and pavement markings, complete in place, including establishing alignment for stripes, and layout work, as shown on the plans, and as specified in these Special Provisions, and as directed by the Engineer.

The contract lump sum price paid for Removal of Pavement Striping and Markers shall include in the lump sum price paid for "Removal of Existing Pavement Striping" full compensation for furnishing all labor, materials, tools, equipment, and incidentals, and for doing all the work involved in, removing traffic stripes, markings and markers, complete in place, as shown on the plans, and as specified in these Special Provisions, and as directed by the Engineer.

SECTION 85. PAVEMENT MARKERS

85-1.01 DESCRIPTION
In addition to the requirements specified in this section, pavement markers shall be installed per provisions in Section 85 of the City of Rocklin Construction Standards.

Pavement markers shall be applied at all locations where existing pavement markers are obliterated or covered as a result of Cape Seal operations.

85-1.04 NON-REFLECTIVE PAVEMENT MARKERS
All non-reflective pavement markers shall be ceramic.

85-1.06 PLACEMENT
At locations where bike lane striping is used to channelize traffic, acceleration lanes, right turn deceleration lanes and bus turnouts, both stripes shall be detail 38. Reflective pavement markers shall be placed along both stripes.

85-1.08 MEASUREMENT
The Contractor shall be responsible for removal and establishing alignment of all Pavement Markers outlined on the plans. The Contractor shall place lane lines, centerlines, No passing zones – two way direction lines, channelizing lines, and fire hydrant markers. The Contractor shall be responsible for placing all pavement markers.

85-1.09 PAYMENT
Full compensation for conforming to all requirements specified in pavement markers shall be paid for at the contract lump sum price paid for “Install Thermoplastic Pavement Striping and Markings, and Pavement Markers” and “Remove Existing Pavement Striping.”

Full compensation for conforming to all requirements specified in pavement markers shall be paid for at the contract lump sum price paid “Install Thermoplastic Pavement Striping and Markings, and Pavement Markers” and shall include full compensation for furnishing all labor, materials, tools, equipment, and incidentals, and for doing all the work involved in applying pavement markings, complete in place, including establishing alignments for stripes, and layout work, as specified in the Standard Specifications and these Special Provisions, and as directed by the Engineer.

The contract lump sum price paid for removal of traffic pavement markers shall be included in the lump sum price paid for “Removal of Existing Pavement Striping,” and shall include full compensation for furnishing all labor, materials, tools, equipment, and incidentals, and for doing all the work involved in, removing traffic stripes, markings and markers, complete in place, as shown on the plans, and as specified in these Special Provisions, and as directed by the Engineer.

SECTION 90: PORTLAND CEMENT CONCRETE

90-1 GENERAL

90-1.01 DESCRIPTION
Portland cement concrete shall be composed of cementitious material, fine aggregate, coarse aggregate, admixtures if used, and water, proportioned and mixed as specified in these specifications.

The Contractor shall determine the mix proportions for concrete in conformance with these specifications. Unless otherwise specified, cementitious material shall be a combination of cement and mineral admixture. Cementitious material shall be either:

1. "Type IP (MS) Modified" cement; or
2. A combination of "Type II Modified" portland cement and mineral admixture; or
3. A combination of Type V portland cement and mineral admixture. Type III portland cement shall be used only as allowed in the special provisions or with the approval of the Engineer.

Seven Sack mix concrete shall contain not less than 658 pounds of cementitious material per cubic yard.

Six sack mix concrete shall contain not less than 590 pounds of cementitious material per cubic yard.

Five sack mix concrete shall contain not less than 564 pounds of cementitious material per cubic yard.

Four sack mix concrete shall contain not less than 376 pounds of cementitious material per cubic yard.
Minor concrete shall contain not less than 548 pounds of cementitious material per cubic yard unless otherwise specified in these specifications or the special provisions.

Unless otherwise designated on the plans or specified in these specifications or the special provisions, the amount of cementitious material used per cubic yard of concrete in structures or portions of structures shall conform to the following:

Use	Cementitious Material Content pounds/CY
Concrete designated by compressive strength: Deck slabs and slab spans of bridges Roof sections of exposed top box culverts Other portions of structures	674 min., 801 max 674 min., 801 max 590 min., 801 max
Concrete not designated by compressive strength: Deck slabs and slab spans of bridges Roof sections of exposed top box culverts Prestressed members Seal courses Other portions of structures	674 min. 674 min. 674 min. 674 min. 590 min.
Concrete for precast members	590 min., 927 max.

Whenever the 28-day compressive strength shown on the plans is greater than 3,600 pounds per square inch, the concrete shall be designated by compressive strength. If the plans show a 28-day compressive strength that is 4,000 pounds per square inch or greater, an additional 14 days will be allowed to obtain the specified strength. The 28-day compressive strengths shown on the plans that are 3,600 pounds per square inch or less are shown for design information only and are not a requirement for acceptance of the concrete.

Concrete designated by compressive strength shall be proportioned such that the concrete will attain the strength shown on the plans or specified in the special provisions.

Before using concrete for which the mix proportions have been determined by the Contractor, or in advance of revising those mix proportions, the Contractor shall submit in writing to the Engineer a copy of the mix design.

Compliance with cementitious material content requirements will be verified in conformance with procedures described in California Test 518 for cement content. For testing purposes, mineral admixture shall be considered to be cement. Batch proportions shall be adjusted as necessary to produce concrete having the specified cementitious material content.

If any concrete has a cementitious material, portland cement, or mineral admixture content that is less than the minimum required, the concrete shall be removed. The requirements of the preceding paragraph shall not apply to minor concrete or commercial quality concrete.

90-2 MATERIALS

90-2.01 CEMENT

Unless otherwise specified, cement shall be either "Type IP (MS) Modified" cement, "Type II Modified" portland cement or Type V portland cement.

"Type IP (MS) Modified" cement shall conform to the requirements for Type IP (MS) cement in ASTM Designation: C 595, and shall be comprised of an intimate and uniform blend of Type II cement and not more than 35 percent by mass of mineral admixture. The type and minimum amount of mineral admixture used in the manufacture of "Type IP (MS) Modified" cement shall be in conformance with the provisions in Section 90-4.08, "Required Use of Mineral Admixtures."

"Type II Modified" portland cement shall conform to the requirements for Type II portland cement in ASTM Designation: C 150.

In addition, "Type IP (MS) Modified" cement and "Type II Modified" portland cement shall conform to the following requirements:

A. The cement shall not contain more than 0.60 percent by mass of alkalis, calculated as the percentage of Na2O plus 0.658 times the percentage of K2O, when determined by either direct intensity flame photometry or by the atomic absorption method. The instrument and procedure used shall be qualified as to precision and accuracy in conformance with the requirements in ASTM Designation: C 114;

B. The autoclave expansion shall not exceed 0.50 percent; and

C. Mortar, containing the cement to be used and Ottawa sand, when tested in conformance with California Test 527, shall not expand in water more than 0.010 percent and shall not contract in air more than 0.048 percent, except that when cement is to be used for precast prestressed concrete piling, precast prestressed concrete members, or steam cured concrete products, the mortar shall not contract in air more than 0.053 percent.

Type III and Type V portland cements shall conform to the requirements in ASTM Designation: C 150 and the additional requirements listed above for "Type II Modified" portland cement, except that when tested in conformance with California Test 527, mortar containing Type III portland cement shall not contract in air more than 0.075 percent.

Cement used in the manufacture of cast-in-place concrete for exposed surfaces of like elements of a structure shall be from the same cement mill.

Cement shall be protected from exposure to moisture until used. Sacked cement shall be piled to permit access for tally, inspection, and identification of each shipment.

Adequate facilities shall be provided to assure that cement meeting the provisions specified in this Section 90-2.01 shall be kept separate from other cement in order to prevent any but the specified cement from entering the work. Safe and suitable facilities for sampling cement shall be provided at the weigh hopper or in the feed line immediately in advance of the hopper, in conformance with California Test 125.

If cement is used prior to sampling and testing as provided in Section 6-1.07, "Certificates of Compliance," and the cement is delivered directly to the site of the work, the Certificate of Compliance shall be signed by the cement manufacturer or supplier of the cement. If the cement is used in ready-mixed concrete or in precast concrete products purchased as such by the Contractor, the Certificate of Compliance shall be signed by the manufacturer of the concrete or product.

Cement furnished without a Certificate of Compliance shall not be used in the work until the Engineer has had sufficient time to make appropriate tests and has approved the cement for use.

90–2.02 AGGREGATES

Aggregates shall be free from deleterious coatings, clay balls, roots, bark, sticks, rags, and other extraneous material.

Natural aggregates shall be thoroughly and uniformly washed before use.

The Contractor, at the Contractor's expense, shall provide safe and suitable facilities, including necessary splitting devices for obtaining samples of aggregates, in conformance with California Test 125.

Aggregates shall be of such character that it will be possible to produce workable concrete within the limits of water content provided in Section 90-6.06, "Amount of Water and Penetration."

Aggregates shall have not more than 10 percent loss when tested for soundness in conformance with the requirements in California Test 214. The soundness requirement for fine aggregate will be waived, provided that the durability index, Df, of the fine aggregate is 60, or greater, when tested for durability in conformance with California Test 229.

If the results of any one or more of the Cleanness Value, Sand Equivalent, or aggregate grading tests do not meet the requirements specified for "Operating Range" but all meet the "Contract Compliance" requirements, the placement of concrete shall be suspended at the completion of the current pour until tests or other information indicate that the next material to be used in the work will comply with the requirements specified for "Operating Range."

If the results of either or both the Cleanness Value and coarse aggregate grading tests do not meet the requirements specified for "Contract Compliance," the concrete that is represented by the tests shall be removed.

If the results of either or both the Sand Equivalent and fine aggregate grading tests do not meet the requirements specified for "Contract Compliance," the concrete which is represented by the tests shall be removed.

The 2 preceding paragraphs apply individually to the "Contract Compliance" requirements for coarse aggregate and fine aggregate. When both coarse aggregate and fine aggregate do not conform to the "Contract Compliance" requirements, both paragraphs shall apply.

No single Cleanness Value, Sand Equivalent or aggregate grading test shall represent more than 325 cubic yards of concrete or one day's pour, whichever is smaller.

When the source of an aggregate is changed, the Contractor shall adjust the mix proportions and submit in writing to the Engineer a copy of the mix design before using the aggregates.

90-2.02A Coarse Aggregate

Coarse aggregate shall consist of gravel, crushed gravel, crushed rock, crushed air-cooled iron blast furnace slag or combinations thereof. Crushed air-cooled blast furnace slag shall not be used in reinforced or prestressed concrete. Coarse aggregate shall conform to the following quality requirements:

Tests	California Test	Requirements
Loss in Los Angeles Rattler (after 500 revolutions)	211	45% max.
Cleanness Value		
Operating Range	227	75 min.
Contract Compliance	227	71 min.

In lieu of the above Cleanness Value requirements, a Cleanness Value "Operating Range" limit of 71, minimum, and a Cleanness Value "Contract Compliance" limit of 68, minimum, will be used to determine the acceptability of the coarse aggregate if the Contractor furnishes a Certificate of Compliance, as provided in Section 6-1.07, "Certificates of Compliance," certifying that:

1. coarse aggregate sampled at the completion of processing at the aggregate production plant had a Cleanness Value of not less than 82 when tested by California Test 227; and

2. prequalification tests performed in conformance with the requirements in California Test 549 indicated that the aggregate would develop a relative strength of not less than 95 percent and would have a relative shrinkage not greater than 105 percent, based on concrete.

90-2.02B Fine Aggregate

Fine aggregate shall consist of natural sand, manufactured sand produced from larger aggregate or a combination thereof. Manufactured sand shall be well graded. Fine aggregate shall conform to the following quality requirements:

Test	California Test	Requirements
Organic Impurities	213	Satisfactory
Mortar Strengths Relative to Ottawa Sand	515	95%, min.
Sand Equivalent:		
Operating Range	217	75, min.
Contract Compliance	217	71, min.

A Fine aggregate developing a color darker than the reference standard color solution may be accepted if it is determined by the Engineer, from mortar strength tests, that a darker color is acceptable.

In lieu of the above Sand Equivalent requirements, a Sand Equivalent "Operating Range" limit of 71 minimum and a Sand Equivalent "Contract Compliance" limit of 68 minimum will be used to determine the acceptability of the fine aggregate if the Contractor furnishes a Certificate of Compliance, as provided in Section 6-1.07, "Certificates of Compliance," certifying that:

1. fine aggregate sampled at the completion of processing at the aggregate production plant had a Sand Equivalent value of not less than 82 when tested by California Test 217; and

2. prequalification tests performed in conformance with California Test 549 indicated that the aggregate would develop a relative strength of not less than 95 percent and would have a relative shrinkage not greater than 105 percent, based on concrete.

90-2.03 WATER

In conventionally reinforced concrete work, the water for curing, for washing aggregates, and for mixing shall be free from oil and shall not contain more than 1000 parts per million of chlorides as Cl, when tested in conformance with California Test 422, nor more than 1300 parts per million of sulfates as SO4, when tested in conformance with California Test 417. In restressed concrete work, the water for curing, for washing aggregates, and for mixing shall be free from oil and shall not contain more than 650 parts

per million of chlorides as Cl, when tested in conformance with California Test 422, nor more than 1300 parts per million of sulfates as SO4, when tested in conformance with California Test 417. In no case shall the water contain an amount of impurities that will cause either: 1) a change in the setting time of cement of more than 25 percent when tested in conformance with the requirements in ASTM Designation: C 191 or ASTM Designation: C 266 or 2) a reduction in the compressive strength of mortar at 14 days of more than 5 percent, when tested in conformance with the requirements in ASTM Designation: C 109, when compared to the results obtained with distilled water or deionized water, tested in conformance with the requirements in ASTM Designation: C 109.

In non-reinforced concrete work, the water for curing, for washing aggregates and for mixing shall be free from oil and shall not contain more than 2000 parts per million of chlorides as Cl, when tested in conformance with California Test 422, or more than 1500 parts per million of sulfates as SO4, when tested in conformance with California Test 417.

In addition to the above provisions, water for curing concrete shall not contain impurities in a sufficient amount to cause discoloration of the concrete or produce etching of the surface. Water reclaimed from mixer wash-out operations may be used in mixing concrete. The water shall not contain coloring agents or more than 300 parts per million of alkalis (Na2O + 0.658 K2O) as determined on the filtrate. The specific gravity of the water shall not exceed 1.03 and shall not vary more than ±0.010 during a day's operations.

90-2.04 ADMIXTURE MATERIALS

Admixture materials shall conform to the requirements in the following ASTM Designations:

A. Chemical Admixtures—ASTM Designation: C 494.
B. Air-entraining Admixtures—ASTM Designation: C 260.
C. Calcium Chloride—ASTM Designation: D 98.
D. Mineral Admixtures—Coal fly ash; raw or calcined natural pozzolan as specified in ASTM Designation: C 618; silica fume conforming to the requirements in ASTM Designation: C 1240, with reduction of mortar expansion of 80 percent, minimum, using the cement from the proposed mix design.

Unless otherwise specified in the special provisions, mineral admixtures shall be used in conformance with the provisions in Section 90-4.08, "Required Use of Mineral Admixtures." 90-3 AGGREGATE GRADINGS 90-3.01 GENERAL Before beginning concrete work, the Contractor shall submit in writing to the Engineer the gradation of the primary aggregate nominal sizes that the Contractor proposes to furnish. If a primary coarse aggregate or the fine aggregate is separated into 2 or more sizes, the proposed gradation shall consist of the gradation for each individual size, and the proposed proportions of each individual size, combined mathematically to indicate one proposed gradation. The proposed gradation shall meet the grading requirements shown in the table in this section, and shall show the percentage passing each of the sieve sizes used in determining the end result.

The Engineer may waive, in writing, the gradation requirements in this Section 90-3.01 and in Sections 90-3.02, "Coarse Aggregate Grading," 90-3.03, "Fine Aggregate Grading," and 90-3.04, "Combined Aggregate Gradings," if, in the Engineer's opinion, furnishing the gradation is not necessary for the type or amount of concrete work to be constructed.

Gradations proposed by the Contractor shall be within the following percentage passing limits:

Primary Aggregate Nominal Size	Size Sieve	Limits of Proposed Gradation
1 1/2" x 3/4"	1”	19-41
1” x No. 4	3/4”	52-85
1” x No. 4	3/8”	15-38
1/2” x No. 4	3/8”	40-78
3/8” x No. 8	3/8”	50-85
Fine Aggregate	No. 16	55-75
Fine Aggregate	No. 30	34-46
Fine Aggregate	No. 50	16-29

Should the Contractor change the source of supply, the Contractor shall submit in writing to the Engineer the new gradations before their intended use.

90-3.02 COARSE AGGREGATE GRADING

The grading requirements for coarse aggregates are shown in the following table for each size of coarse aggregate:

Sieve Sizes	**Percentage Passing Primary Aggregate Nominal Sizes**							
	1 1/2” x 3/4”		1” x No. 4		1/2” x No. 4		3/8” x No. 8	
	Operating Range	**Contract Compliance**	**Operating Range**	**Contract Compliance**	**Operating Range**	**Contract Compliance**	**Operating Range**	**Contract Compliance**
2”	100	100	-	-	-	-	-	-
1 1/2”	88-100	85-100	100	100	-	-	-	-
1”	X ± 18	X ± 25	88-100	86-100	-	-	-	-
3/4”	0-17	0-20	X ± 15	X ± 22	100	100	-	-
1/2”	-	-	-	-	82-100	80-100	100	100
3/8”	0-7	0-9	X ± 15	X ± 22	X ± 15	X ± 22	X ± 15	X ± 20
No. 4	-	-	0-16	0-18	0-15	0-18	0-25	0-28
No. 8	-	-	0-6	0-7	0-6	0-7	0-6	0-7

In the above table, the symbol X is the gradation that the Contractor proposes to furnish for the specific sieve size as provided in Section 90-3.01, "General."

Coarse aggregate for the 1 1/2 inch, maximum, combined aggregate grading as provided in Section 90-3.04, "Combined Aggregate Gradings," shall be furnished in 2 or more primary aggregate nominal sizes. Each primary aggregate nominal size may be separated into 2 sizes and stored separately, provided that the combined material conforms to the grading requirements for that particular primary aggregate nominal size.

When the one inch, maximum, combined aggregate grading as provided in Section 90-3.04, "Combined Aggregate Gradings," is to be used, the coarse aggregate may be separated into 2 sizes and stored separately, provided that the combined material shall conform to the grading requirements for the 1 inch x No. 4 primary aggregate nominal size.

90-3.03 FINE AGGREGATE GRADING

Fine aggregate shall be graded within the following limits:

Sieve Sizes	**Percentage Passing**	
	Operating Range	Contract Compliance
3/8”	100	100
No. 4	95-100	93-100
No. 8	65-95	61-99
No. 16	X ± 10	X ± 13
No. 30	X ± 9	X ± 12
No. 50	X ± 6	X ± 9
No. 100	2-12	1-15
No. 200	0-8	0-10

In the above table, the symbol X is the gradation that the Contractor proposes to furnish for the specific sieve size as provided in Section 90-3.01,"General."

In addition to the above required grading analysis, the distribution of the fine aggregate sizes shall be such that the difference between the total percentage passing the No. 16 sieve and the total percentage passing the No. 30 sieve shall be between 10 and 40, and the difference between the percentage passing the No. 30 and No. 50 sieves shall be between 10 and 40.

Fine aggregate may be separated into 2 or more sizes and stored separately, provided that the combined material conforms to the grading requirements specified in this Section 90-3.03.

90-3.04 COMBINED AGGREGATE GRADINGS

Combined aggregate grading limits shall be used only for the design of concrete mixes. Concrete mixes shall be designed so that aggregates are combined in proportions that shall produce a mixture within the grading limits for combined aggregates as specified herein. Within these limitations, the relative proportions shall be as ordered by the Engineer, except as otherwise provided in Section 90-1.01, "Description."

The combined aggregate grading, except when specified otherwise in these specifications or the special provisions, shall be either the 1 1/2 inch, maximum grading, or the one inch, maximum grading, at the option of the Contractor.

Sieve Sizes	Percentage Passing			
	1 ½ inch Max.	1 inch Max.	½ inch Max.	3/8 inch Max.
2”	100	-	-	-
1 ½”	90-100	100	-	-
1”	50-85	90-100	-	-
3/4”	45-75	55-100	100	-
1/2”	-	-	90-100	100
3/8”	38-45	45-75	55-86	50-100
No. 4	30-45	35-60	45-63	45-63
No. 8	23-48	27-45	35-49	35-49
No. 16	17-33	20-35	25-37	25-37
No. 30	10-22	12-25	15-25	15-25
No. 50	4-10	5-15	5-15	5-15
No. 100	1-6	1-8	1-8	1-8
No. 200	0-3	0-4	0-4	0-4

Changes from one grading to another shall not be made during the progress of the work unless permitted by the Engineer.

90-4 ADMIXTURES

90-4.01 GENERAL

Admixtures used in portland cement concrete shall conform to and be used in conformance with the provisions in this Section 90-4 and the special provisions. Admixtures shall be used when specified or ordered by the Engineer and may be used at the Contractor's option as provided herein.

Chemical admixtures and air-entraining admixtures containing chlorides as Cl in excess of one percent by mass of admixture, as determined by California Test 415, shall not be used in prestressed or reinforced concrete.

Calcium chloride shall not be used in concrete except when otherwise specified.

Mineral admixture used in concrete for exposed surfaces of like elements of a structure shall be from the same source and of the same percentage.

Admixtures shall be uniform in properties throughout their use in the work. Should it be found that an admixture as furnished is not uniform in properties; its use shall be discontinued.

If more than one admixture is used, the admixtures shall be compatible with each other so that the desirable effects of all admixtures used will be realized.

90-4.02 MATERIALS

Admixture materials shall conform to the provisions in Section 90–2.04, "Admixture Materials."

90-4.03 ADMIXTURE APPROVAL

No admixture brand shall be used in the work unless it is on the Department's current list of approved brands for the type of admixture involved.

Admixture brands will be considered for addition to the approved list if the manufacturer of the admixture submits to the Transportation Laboratory a sample of the admixture accompanied by certified test results demonstrating that the admixture complies with the requirements in the appropriate ASTM Designation and these specifications. The sample shall be sufficient to permit performance of all required tests. Approval of admixture brands will be dependent upon a determination as to compliance with the requirements, based on the certified test results submitted, together with tests the Department may elect to perform.

When the Contractor proposes to use an admixture of a type on the current list of approved admixture brands, the Contractor shall furnish a Certificate of Compliance from the manufacturer, as provided in Section 6-1.07, "Certificates of Compliance," certifying that the admixture furnished is the same as that previously approved. If a previously approved admixture is not accompanied by a Certificate of Compliance, the admixture shall not be used in the work until the Engineer has had sufficient time to make the appropriate tests and has approved the admixture for use. The Engineer may take samples for testing at any time, whether or not the admixture has been accompanied by a Certificate of Compliance.

If a mineral admixture is delivered directly to the site of the work, the Certificate of Compliance shall be signed by the manufacturer or supplier of the mineral admixture. If the mineral admixture is used in ready-mix concrete or in precast concrete products purchased as such by the Contractor, the Certificate of Compliance shall be signed by the manufacturer of the concrete or product.

90-4.04 REQUIRED USE OF CHEMICAL ADMIXTURES AND CALCIUM CHLORIDE
When the use of a chemical admixture or calcium chloride is specified, the admixture shall be used at the dosage specified, except that if no dosage is specified, the admixture shall be used at the dosage normally recommended by the manufacturer of the admixture.

Calcium chloride shall be dispensed in liquid, flake, or pellet form. Calcium chloride dispensed in liquid form shall conform to the provisions for dispensing liquid admixtures in Section 90-4.10, "Proportioning and Dispensing Liquid Admixtures."

90-4.05 OPTIONAL USE OF CHEMICAL ADMIXTURES
The Contractor will be permitted to use Type A or F, water-reducing; Type B, retarding; or Type D or G, water-reducing and retarding admixtures as described in ASTM Designation: C 494 to conserve cementitious material or to facilitate any concrete construction application subject to the following conditions:

A. When a water-reducing admixture or a water-reducing and retarding admixture is used, the cementitious material content specified or ordered may be reduced by a maximum of 5 percent by mass, except that the resultant cementitious material content shall be not less than 506 pounds per cubic yard, and

B. When a reduction in cementitious material content is made, the dosage of admixture used shall be the dosage used in determining approval of the admixture.

Unless otherwise specified, a Type C accelerating chemical admixture conforming to the requirements in ASTM Designation: C 494, may be used in portland cement concrete. Inclusion in the mix design submitted for approval will not be required provided that the admixture is added to counteract changing conditions that contribute to delayed setting of the portland cement concrete, and the use or change in dosage of the admixture is approved in writing by the Engineer.

90-4.06 REQUIRED USE OF AIR-ENTRAINING ADMIXTURES
When air-entrainment is specified or ordered by the Engineer, the air-entraining admixture shall be used in amounts to produce a concrete having the specified air content as determined by California Test 504.

90-4.07 OPTIONAL USE OF AIR-ENTRAINING ADMIXTURES
When air-entrainment has not been specified or ordered by the Engineer, the Contractor will be permitted to use an air-entraining admixture to facilitate the use of any construction procedure or equipment provided that the average air content, as determined by California Test 504, of 3 successive tests does not exceed 4 percent, and no single test value exceeds 5.5 percent. If the Contractor elects to use an air-entraining admixture in concrete for pavement, the Contractor shall so indicate at the time the Contractor designates the source of aggregate as provided in Section 40-1.015, "Cement Content."

90-4.08 REQUIRED USE OF MINERAL ADMIXTURES
Unless otherwise specified, mineral admixture shall be combined with cement to make cementitious material.

The calcium oxide content of mineral admixtures shall not exceed 10 percent and the available alkali, as sodium oxide equivalent, shall not exceed 1.5 percent when determined in conformance with the requirements in ASTM Designation: C 618.

The amounts of cement and mineral admixture used in cementitious material shall be sufficient to satisfy the minimum cementitious material content requirements specified in Section 90-1.01, "Description," or Section 90-4.05, "Optional Use of Chemical Admixtures," and shall conform to the following:

A. The minimum amount of cement shall not be less than 75 percent by mass of the specified minimum cementitious material content;

B. The minimum amount of mineral admixture to be combined with cement shall be determined using one of the following criteria:

1. When the calcium oxide content of a mineral admixture is equal to or less than 2 percent by mass, the amount of mineral admixture shall not be less than 15 percent by mass of the total amount of cementitious material to be used in the mix;

2. When the calcium oxide content of an amount of mineral admixture shall not be less than 25 percent by mass of the total amount of cementitious material to be used in the mix;

3. When a mineral admixture that conforms to the provisions for silica fume in Section 90-2.04, "Admixture Materials," is used, the amount of mineral admixture shall not be less than 10 percent by mass of the total amount of cementitious material to be used in the mix

C. The total amount of mineral admixture shall not exceed 35 percent by mass of the total amount of cementitious material to be used in the mix. Where Section 90-1.01, "Description," specifies a maximum cementitious content in pounds per cubic yard, the total mass of cement and mineral admixture per cubic yard shall not exceed the specified maximum cementitious material content.

90-4.10 PROPORTIONING AND DISPENSING LIQUID ADMIXTURES
Chemical admixtures and air-entraining admixtures shall be dispensed in liquid form. Dispensers for liquid admixtures shall have sufficient capacity to measure at one time the prescribed quantity required for each batch of concrete. Each dispenser shall include a graduated measuring unit into which liquid admixtures are measured to within ±5 percent of the prescribed quantity for each batch. Dispensers shall be located and maintained so that the graduations can be accurately read from the point at which proportioning operations are controlled to permit a visual check of batching accuracy prior to discharge. Each measuring unit shall be clearly marked for the type and quantity of admixture.

Each liquid admixture dispensing system shall be equipped with a sampling device consisting of a valve located in a safe and readily accessible position such that a sample of the admixture may be withdrawn slowly by the Engineer.

If more than one liquid admixture is used in the concrete mix, each liquid admixture shall have a separate measuring unit and shall be dispensed by injecting equipment located in such a manner that the admixtures are not mixed at high concentrations and do not interfere with the effectiveness of each other. When air-entraining admixtures are used in conjunction with other liquid admixtures, the air-entraining admixture shall be the first to be incorporated into the mix.

When automatic proportioning devices are required for concrete pavement, dispensers for liquid admixtures shall operate automatically with the batching control equipment. The dispensers shall be equipped with an automatic warning system in good operating condition that will provide a visible or audible signal at the point at which proportioning operations are controlled when the quantity of admixture measured for each batch of concrete varies from the preselected dosage by more than 5 percent, or when the entire contents of the measuring unit are not emptied from the dispenser into each batch of concrete.

Unless liquid admixtures are added to premeasured water for the batch, their discharge into the batch shall be arranged to flow into the stream of water so that the admixtures are well dispersed throughout the batch, except that air-entraining admixtures may be dispensed directly into moist sand in the batching bins provided that adequate control of the air content of the concrete can be maintained.

Liquid admixtures requiring dosages greater than one-half gallon per cubic yard shall be considered to be water when determining the total amount of free water as specified in Section 90-6.06, "Amount of Water and Penetration."

Special admixtures, such as "high range" water reducers that may contribute to a high rate of slump loss, shall be measured and dispensed as recommended by the admixture manufacturer and as approved by the Engineer.

90-4.11 STORAGE, PROPORTIONING, AND DISPENSING OF MINERAL ADMIXTURES

Mineral admixtures shall be protected from exposure to moisture until used. Sacked material shall be piled to permit access for tally, inspection and identification for each shipment.

Adequate facilities shall be provided to assure that mineral admixtures meeting the specified requirements are kept separate from other mineral admixtures in order to prevent any but the specified mineral admixtures from entering the work. Safe and suitable facilities for sampling mineral admixtures shall be provided at the weigh hopper or in the feed line immediately in advance of the hopper.

Mineral admixtures shall be incorporated into concrete using equipment conforming to the requirements for cement weigh hoppers, and charging and discharging mechanisms in ASTM Designation: C 94, in Section 90-5.03, "Proportioning," and in this Section 90-4.11.

When concrete is completely mixed in stationary paving mixers, the mineral admixture shall be weighed in a separate weigh hopper conforming to the provisions for cement weigh hoppers and charging and discharging mechanisms in Section 90-5.03A, "Proportioning for Pavement," and the mineral admixture and cement shall be introduced simultaneously into the mixer proportionately with the aggregate. If the mineral admixture is not weighed in a separate weigh hopper, the Contractor shall provide certification that the stationary mixer is capable of mixing the cement, admixture, aggregates and water uniformly prior to discharge. Certification shall contain the following:

A. Test results for 2 compressive strength test cylinders of concrete taken within the first one-third and 2 compressive strength test cylinders of concrete taken within the last one-third of the concrete discharged from a single batch from the stationary paving mixer. Strength tests and cylinder preparation will be in conformance with the provisions of Section 90-9, "Compressive Strength;"

B. Calculations demonstrating that the difference in the averages of 2 compressive strengths taken in the first one-third is no greater than 7.5 percent different than the averages of 2 compressive strengths taken in the last one-third of the concrete discharged from a single batch from the stationary paving mixer. Strength tests and cylinder preparation will be in conformance with the provisions of Section 90-9, "Compressive Strength;" and

C. The mixer rotation speed and time of mixing prior to discharge that are required to produce a mix that meets the requirements above.

90-5 PROPORTIONING

90-5.01 STORAGE OF AGGREGATES

Aggregates shall be stored or stockpiled in such a manner that separation of coarse and fine particles of each size shall be avoided and also that the various sizes shall not become intermixed before proportioning.

Aggregates shall be stored or stockpiled and handled in a manner that shall prevent contamination by foreign materials. In addition, storage of aggregates at batching or mixing facilities that are erected subsequent to the award of the contract and that furnish concrete to the project shall conform to the following:

A. Intermingling of the different sizes of aggregates shall be positively prevented. The Contractor shall take the necessary measures to prevent intermingling. The preventive measures may include, but are not necessarily limited to, physical separation of stockpiles or construction of bulkheads of adequate length and height; and

B. Contamination of aggregates by contact with the ground shall be positively prevented. The Contractor shall take the necessary measures to prevent contamination. The preventive measures shall include, but are not necessarily limited to, placing aggregates on wooden platforms or on hardened surfaces consisting of portland cement concrete, asphalt concrete, or cement treated material.

In placing aggregates in storage or in moving the aggregates from storage to the weigh hopper of the batching plant, any method that may cause segregation, degradation, or the combining of materials of different gradings that will result in any size of aggregate at the weigh hopper failing to meet the grading requirements, shall be discontinued. Any method of handling aggregates that results in excessive breakage of particles shall be discontinued. The use of suitable devices to reduce impact of falling aggregates may be required by the Engineer.

90-5.02 PROPORTIONING DEVICES

Weighing, measuring, or metering devices used for proportioning materials shall conform to the requirements in Section 9-1.01, "Measurement of Quantities," and this Section 90-5.02. In addition, automatic weighing systems shall comply with the requirements for automatic proportioning devices in Section 90-5.03A, "Proportioning for Pavement." Automatic devices shall be automatic to the extent

that the only manual operation required for proportioning the aggregates, cement, and mineral admixture for one batch of concrete is a single operation of a switch or starter.

Proportioning devices shall be tested at the expense of the Contractor as frequently as the Engineer may deem necessary to ensure their accuracy.

Weighing equipment shall be insulated against vibration or movement of other operating equipment in the plant. When the plant is in operation, the mass of each batch of material shall not vary from the mass designated by the Engineer by more than the tolerances specified herein.

Equipment for cumulative weighing of aggregate shall have a zero tolerance of ±0.5 percent of the designated total batch mass of the aggregate. For systems with individual weigh hoppers for the various sizes of aggregate, the zero tolerance shall be ±0.5 percent of the individual batch mass designated for each size of aggregate. Equipment for cumulative weighing of cement and mineral admixtures shall have a zero tolerance of ±0.5 percent of the designated total batch mass of the cement and mineral admixture. Equipment for weighing cement or mineral admixture separately shall have a zero tolerance of ±0.5 percent of their designated individual batch masses. Equipment for measuring water shall have a zero tolerance of ±0.5 percent of its designated mass or volume.

The mass indicated for any batch of material shall not vary from the preselected scale setting by more than the following:

A. Aggregate weighed cumulatively shall be within 1.0 percent of the designated total batch mass of the aggregate. Aggregates weighed individually shall be within 1.5 percent of their respective designated batch masses; and

B. Cement shall be within 1.0 percent of its designated batch mass. When weighed individually, mineral admixture shall be within 1.0 percent of its designated batch mass. When mineral admixture and cement are permitted to be weighed cumulatively, cement shall be weighed first to within 1.0 percent of its designated batch mass, and the total for cement and mineral admixture shall be within 1.0 percent of the sum of their designated batch masses; and

C. Water shall be within 1.5 percent of its designated mass or volume.

Each scale graduation shall be approximately 0.001 of the total capacity of the scale. The capacity of scales for weighing cement, mineral admixture, or cement plus mineral admixture and aggregates shall not exceed that of commercially available scales having single graduations indicating a mass not exceeding the maximum permissible mass variation above, except that no scale shall be required having a capacity of less than 1,000 pounds, with one pound graduations.

90-5.03 PROPORTIONING

Proportioning shall consist of dividing the aggregates into the specified sizes, each stored in a separate bin, and combining them with cement, mineral admixture, and water as provided in these specifications. Aggregates shall be proportioned by mass.

At the time of batching, aggregates shall have been dried or drained sufficiently to result in a stable moisture content such that no visible separation of water from aggregate will take place during transportation from the proportioning plant to the point of mixing. In no event shall the free moisture

content of the fine aggregate at the time of batching exceed 8 percent of its saturated, surface-dry mass.

Should separate supplies of aggregate material of the same size group, but of different moisture content or specific gravity or surface characteristics affecting workability, be available at the proportioning plant, withdrawals shall be made from one supply exclusively and the materials therein completely exhausted before starting upon another.

Bulk "Type IP (MS) Modified" cement shall be weighed in an individual hopper and shall be kept separate from the aggregates until the ingredients are released for discharge into the mixer.

Bulk cement and mineral admixture may be weighed in separate, individual weigh hoppers or may be weighed in the same weigh hopper and shall be kept separate from the aggregates until the ingredients are released for discharge into the mixer. If the cement and mineral admixture are weighed cumulatively, the cement shall be weighed first.

When cement and mineral admixtures are weighed in separate weigh hoppers, the weigh systems for the proportioning of the aggregate, the cement, and the mineral admixture shall be individual and distinct from all other weigh systems. Each weigh system shall be equipped with a hopper, a lever system, and an indicator to constitute an individual and independent material weighing device. The cement and the mineral admixture shall be discharged into the mixer simultaneously with the aggregate.

The scales and weigh hoppers for bulk weighing cement, mineral admixture, or cement plus mineral admixture shall be separate and distinct from the aggregate weighing equipment.

For batches with a volume of one cubic yard or more, the batching equipment shall conform to one of the following combinations:

A. Separate boxes and separate scale and indicator or weighing each size of aggregate.

B. Single box and scale indicator for all aggregates.

C. Single box or separate boxes and automatic weighing mechanism for all aggregates.

In order to check the accuracy of batch masses, the gross mass and tare mass of batch trucks, truck mixers, truck agitators, and non-agitating hauling equipment shall be determined when ordered by the Engineer. The equipment shall be weighed at the Contractor’s expense on scales designated by the Engineer.

90-5.03A Proportioning for Pavement

Aggregates and bulk cement, mineral admixture, and cement plus mineral admixture for use in pavement shall be proportioned by mass by means of automatic proportioning devices of approved type conforming to these specifications.

The Contractor shall install and maintain in operating condition an electronically actuated moisture meter that will indicate, on a readily visible scale, changes in the moisture content of the fine aggregate as it is batched within a sensitivity of 0.5 percent by mass of the fine aggregate.

The batching of cement, mineral admixture, or cement plus mineral admixture and aggregate shall be interlocked so that a new batch cannot be started until all weigh hoppers are empty, the proportioning devices are within zero tolerance, and the discharge gates are closed. The interlock shall permit no part of the batch to be discharged until all aggregate hoppers and the cement and mineral admixture hoppers or the cement plus mineral admixture hopper are charged with masses that are within the tolerances specified in Section 90-5.02, "Proportioning Devices."

When interlocks are required for cement and mineral admixture charging mechanisms and cement and mineral admixtures are weighed cumulatively, their charging mechanisms shall be interlocked to prevent the introduction of mineral admixture until the mass of cement in the cement weigh hopper is within the tolerances specified in Section 90-5.02, "Proportioning Devices."

The discharge gate on the cement and mineral admixture hoppers or the cement plus mineral admixture hopper shall be designed to permit regulating the flow of cement, mineral admixture, or cement plus mineral admixture into the aggregate as directed by the Engineer.

When separate weigh boxes are used for each size of aggregate, the discharge gates shall permit regulating the flow of each size of aggregate as directed by the Engineer.

Material discharged from the several bins shall be controlled by gates or by mechanical conveyors. The means of withdrawal from the several bins, and of discharge from the weigh box, shall be interlocked so that not more than one bin can discharge at a time, and so that the weigh box cannot be tripped until the required quantity from each of the several bins has been deposited therein. Should a separate weigh box be used for each size of aggregate, all may be operated and discharged simultaneously.

When the discharge from the several bins is controlled by gates, each gate shall be actuated automatically so that the required mass is discharged into the weigh box, after which the gate shall automatically close and lock.

The automatic weighing system shall be designed so that all proportions required may be set on the weighing controller at the same time.

90-6 MIXING AND TRANSPORTING

90-6.01 GENERAL

Concrete shall be mixed in mechanically operated mixers, except that when permitted by the Engineer, batches not exceeding 1/3 cubic yard may be mixed by hand methods in conformance with the provisions in Section 90-6.05, "Hand-Mixing."

Equipment having components made of aluminum or alloys that would have contact with plastic concrete during mixing, transporting, or pumping of portland cement concrete shall not be used.

Concrete shall be homogeneous and thoroughly mixed, and there shall be no lumps or evidence of undispersed cement, mineral admixture, or cement plus mineral admixture.

Uniformity of concrete mixtures will be determined by differences in penetration as determined by California Test 533, or slump as determined by ASTM Designation: C 143, and by variations in the proportion of coarse aggregate as determined by California Test 529.

When the mix design specifies a penetration value, the difference in penetration, determined by comparing penetration tests on 2 samples of mixed concrete from the same batch or truck mixer load, shall not exceed 1/2 inch. When the mix design specifies a slump value, the difference in slump, determined by comparing slump tests on 2 samples of mixed concrete from the same batch or truck mixer load, shall not exceed the values given in the table below. Variation in the proportion of coarse aggregate will be determined by comparing the results of tests of 2 samples of mixed concrete from the same batch or truck mixer load and the difference between the 2 results shall not exceed 169 pounds per cubic yard of concrete.

Average Slump	Maximum Permissible
Less than 4”	1”
4” to 6”	1 1/2”
Greater than 6” to 9”	2”

The Contractor, at the Contractor's expense, shall furnish samples of the freshly mixed concrete and provide satisfactory facilities for obtaining the samples.

90-6.02 MACHINE MIXING

Concrete mixers may be of the revolving drum or the revolving blade type, and the mixing drum or blades shall be operated uniformly at the mixing speed recommended by the manufacturer. Mixers and agitators that have an accumulation of hard concrete or mortar shall not be used.

The temperature of mixed concrete, immediately before placing, shall be not less than 50° F or more than 90° F. Aggregates and water shall be heated or cooled as necessary to produce concrete within these temperature limits. Neither aggregates nor mixing water shall be heated to exceed 150° F. If ice is used to cool the concrete, discharge of the mixer will not be permitted until all ice is melted.

The batch shall be so charged into the mixer that some water will enter in advance of cementitious materials and aggregates. All water shall be in the drum by the end of the first one-fourth of the specified mixing time.

Cementitious materials shall be batched and charged into the mixer by means that will not result either in loss of cementitious materials due to the effect of wind, in accumulation of cementitious materials on surfaces of conveyors or hoppers, or in other conditions that reduce or vary the required quantity of cementitious material in the concrete mixture.

Paving and stationary mixers shall be operated with an automatic timing device. The timing device and discharge mechanism shall be interlocked so that during normal operation no part of the batch will be discharged until the specified mixing time has elapsed.

The total elapsed time between the intermingling of damp aggregates and all cementitious materials and the start of mixing shall not exceed 30 minutes.

The size of batch shall not exceed the manufacturer's guaranteed capacity.

When producing concrete for pavement or base, suitable batch counters shall be installed and maintained in good operating condition at jobsite batching plants and stationary mixers. The batch counters shall indicate the exact number of batches proportioned and mixed.

Concrete shall be mixed and delivered to the jobsite by means of one of the following combinations of operations:

A. Mixed completely in a stationary mixer and the mixed concrete transported to the point of delivery in truck agitators or in non-agitating hauling equipment (central-mixed concrete).

B. Mixed partially in a stationary mixer, and the mixing completed in a truck mixer (shrink-mixed concrete).

C. Mixed completely in a truck mixer (transit-mixed concrete).

D. Mixed completely in a paving mixer.

Agitators may be truck mixers operating at agitating speed or truck agitators. Each mixer and agitator shall have attached thereto in a prominent place a metal plate or plates on which is plainly marked the various uses for which the equipment is designed, the manufacturer's guaranteed capacity of the drum or container in terms of the volume of mixed concrete and the speed of rotation of the mixing drum or blades.

Truck mixers shall be equipped with electrically or mechanically actuated revolution counters by which the number of revolutions of the drum or blades may readily be verified. When shrink-mixed concrete is furnished, concrete that has been partially mixed at a central plant shall be transferred to a truck mixer and all requirements for transit-mixed concrete shall apply. No credit in the number of revolutions at mixing speed shall be allowed for partial mixing in a central plant.

90-6.03 TRANSPORTING MIXED CONCRETE

Mixed concrete may be transported to the delivery point in truck agitators or truck mixers operating at the speed designated by the manufacturer of the equipment as agitating speed, or in non-agitating hauling equipment, provided the consistency and workability of the mixed concrete upon discharge at the delivery point is suitable for adequate placement and consolidation in place, and provided the mixed concrete after hauling to the delivery point conforms to the provisions in Section 90-6.01, "General."

Truck agitators shall be loaded not to exceed the manufacturer's guaranteed capacity and shall maintain the mixed concrete in a thoroughly mixed and uniform mass during hauling.

Bodies of non-agitating hauling equipment shall be constructed so that leakage of the concrete mix, or any part thereof, will not occur at any time.

Concrete hauled in open-top vehicles shall be protected during hauling against rain or against exposure to the sun for more than 20 minutes when the ambient temperature exceeds 75° F.

No additional mixing water shall be incorporated into the concrete during hauling or after arrival at the delivery point, unless authorized by the Engineer. If the Engineer authorizes additional water to be

incorporated into the concrete, the drum shall be revolved not less than 30 revolutions at mixing speed after the water is added and before discharge is commenced.

The rate of discharge of mixed concrete from truck mixer-agitators shall be controlled by the speed of rotation of the drum in the discharge direction with the discharge gate fully open.

When a truck mixer or agitator is used for transporting concrete to the delivery point, discharge shall be completed within 1.5 hours or before 250 revolutions of the drum or blades, whichever occurs first, after the introduction of the cement to the aggregates. Under conditions contributing to quick stiffening of the concrete, or when the temperature of the concrete is 85° F or above, the time allowed may be less than 1.5 hours.

When non-agitating hauling equipment is used for transporting concrete to the delivery point, discharge shall be completed within one hour after the addition of the cement to the aggregates. Under conditions contributing to quick stiffening of the concrete, or when the temperature of the concrete is 85° F or above, the time between the introduction of cement to the aggregates and discharge shall not exceed 45 minutes.

Each load of concrete delivered at the jobsite shall be accompanied by a weighmaster certificate showing the mix identification number, non-repeating load number, date and time at which the materials were batched, the total amount of water added to the load, and for transit-mixed concrete, the reading of the revolution counter at the time the truck mixer is charged with cement. This weighmaster certificate shall also show the actual scale masses (pounds) for the ingredients batched. Theoretical or target batch masses shall not be used as a substitute for actual scale masses.

Weighmaster certificates shall be provided in printed form, or if approved by the Engineer, the data may be submitted in electronic media. Electronic media shall be presented in a tab-delimited format on a 3 1/2-inch diskette with a capacity of at least 1.4 megabytes. Captured data, for the ingredients represented by each batch shall be "line feed, carriage return" (LFCR) and "one line, separate record" with allowances for sufficient fields to satisfy the amount of data required by these specifications.

The Contractor may furnish a weighmaster certificate accompanied by a separate certificate that lists the actual batch masses or measurements for a load of concrete provided that both certificates are imprinted with the same non-repeating load number that is unique to the contract and delivered to the jobsite with the load.

Weighmaster certificates furnished by the Contractor shall conform to the provisions in Section 9-1.01, "Measurement of Quantities."

90-6.04 TIME OR AMOUNT OF MIXING

Mixing of concrete in paving or stationary mixers shall continue for the required mixing time after all ingredients, except water and admixture, if added with the water, are in the mixing compartment of the mixer before any part of the batch is released. Transfer time in multiple drum mixers shall not be counted as part of the required mixing time.

The required mixing time, in paving or stationary mixers, of concrete used for concrete structures, except minor structures, shall be not less than 90 seconds or more than 5 minutes, except that when directed by the Engineer in writing, the requirements of the following paragraph shall apply.

The required mixing time, in paving or stationary mixers, except as provided in the preceding paragraph, shall be not less than 50 seconds or more than 5 minutes.

The minimum required revolutions at the mixing speed for transit-mixed concrete shall not be less than that recommended by the mixer manufacturer, but in no case shall the number of revolutions be less than that required to consistently produce concrete conforming to the provisions for uniformity in Section 90-6.01, "General."

90-6.05 HAND-MIXING

Hand-mixed concrete shall be made in batches of not more than 1/3 cubic yard and shall be mixed on a watertight, level platform. The proper amount of coarse aggregate shall be measured in measuring boxes and spread on the platform and the fine aggregate shall be spread on this layer, the 2 layers being not more than one foot in total depth. On this mixture shall be spread the dry cement and mineral admixture and the whole mass turned no fewer than 2 times dry; then sufficient clean water shall be added, evenly distributed, and the whole mass again turned no fewer than 3 times, not including placing in the carriers or forms.

90-6.06 AMOUNT OF WATER AND PENETRATION

The amount of water used in concrete mixes shall be regulated so that the penetration of the concrete as determined by California Test 533 or the slump of the concrete as determined by ASTM Designation: C 143 is within the "Nominal" values shown in the following table. When the penetration or slump of the concrete is found to exceed the nominal values listed, the mixture of subsequent batches shall be adjusted to reduce the penetration or slump to a value within the nominal range shown. Batches of concrete with a penetration or slump exceeding the maximum values listed shall not be used in the work. When Type F or Type G chemical admixtures are added to the mix, the penetration requirements shall not apply and the slump shall not exceed 9 inches after the chemical admixtures are added.

Type of Work	Nominal		Maximum	
	Penetration inches	Slump inches	Penetration inches	Slump inches
Concrete pavement	0-1	-	1 ½	-
Non-reinforced facilities	0-1 ½	-	2	-
Reinforced concrete structures				
Concrete placed under water	-	6-8	-	9
Cast-in place concrete piles	2 ½ -3 ½	5-7	4	8

The amount of free water used in concrete shall not exceed 308 pounds per cubic yard, plus 20 pounds for each required 100 pounds of cementitious material in excess of 548 pounds per cubic yard.

The term free water is defined as the total water in the mixture minus the water absorbed by the aggregates in reaching a saturated surface-dry condition.

Where there are adverse or difficult conditions that affect the placing of concrete, the above specified penetration and free water content limitations may be exceeded providing the Contractor is granted permission by the Engineer in writing to increase the cementitious material content per cubic yard of concrete. The increase in water and cementitious material shall be at a ratio not to exceed 30 pounds of water per added 100 pounds of cementitious material per cubic yard.

The equipment for supplying water to the mixer shall be constructed and arranged so that the amount of water added can be measured accurately. Any method of discharging water into the mixer for a batch shall be accurate within 1.5 percent of the quantity of water required to be added to the mix for any position of the mixer. Tanks used to measure water shall be designed so that water cannot enter while water is being discharged into the mixer and discharge into the mixer shall be made rapidly in one operation without dribbling. All equipment shall be arranged so as to permit checking the amount of water delivered by discharging into measured containers.

90-7 CURING CONCRETE

90-7.01 METHODS OF CURING

Newly placed concrete shall be cured by the methods specified in this Section 90-7.01 and the special provisions.

90-7.01A Water Method

The concrete shall be kept continuously wet by the application of water for a minimum curing period of 7 days after the concrete has been placed.

When a curing medium consisting of cotton mats, rugs, carpets, or earth or sand blankets is to be used to retain the moisture, the entire surface of the concrete shall be kept damp by applying water with a nozzle that so atomizes the flow that a mist and not a spray is formed, until the surface of the concrete is covered with the curing medium. The moisture from the nozzle shall not be applied under pressure directly upon the concrete and shall not be allowed to accumulate on the concrete in a quantity sufficient to cause a flow or wash the surface. At the expiration of the curing period, the concrete surfaces shall be cleared of all curing mediums.

When concrete bridge decks and flat slabs are to be cured without the use of a curing medium, the entire surface of the bridge deck or slab shall be kept damp by the application of water with an atomizing nozzle as specified in the preceding paragraph, until the concrete has set, after which the entire surface of the concrete shall be sprinkled continuously with water for a period of not less than 7 days.

90-7.01B Curing Compound Method

Surfaces of the concrete that are exposed to the air shall be sprayed uniformly with a curing compound. Curing compounds to be used shall be as follows:

1. Pigmented curing compound conforming to the requirements in ASTM Designation: C 309, Type 2, Class B, except the resin type shall be poly-alpha-methylstyrene.

2. Pigmented curing compound conforming to the requirements in ASTM Designation: C 309, Type 2, Class B.

3. Pigmented curing compound conforming to the requirements in ASTM Designation: C 309, Type 2, Class A.

4. Non-pigmented curing compound conforming to the requirements in ASTM Designation: C 309, Type 1, Class B.

5. Non-pigmented curing compound conforming to the requirements in ASTM Designation: C 309, Type 1, Class A.

6. Non-pigmented curing compound with fugitive dye conforming to the requirements in ASTM Designation: C 309, Type 1-D, Class A.

The infrared scan for the dried vehicle from curing compound (1) shall match the infrared scan on file at the Transportation Laboratory.

The loss of water for each type of curing compound, when tested in conformance with the requirements in California Test 534, shall not be more than 0.15 kilograms per square meter in 24 hours.

The curing compound to be used will be specified elsewhere in these specifications or in the special provisions.

When the use of curing compound is required or permitted elsewhere in these specifications or in the special provisions and no specific kind is specified, any of the curing compounds listed above may be used.

Curing compound shall be applied at a nominal rate of one gallon per 150 square feet, unless otherwise specified.

At any point, the application rate shall be within ±50 square feet per gallon of the nominal rate specified, and the average application rate shall be within ±25 square feet per gallon of the nominal rate specified when tested in conformance with the requirements in California Test 535. Runs, sags, thin areas, skips, or holidays in the applied curing compound shall be evidence that the application is not satisfactory.

Curing compounds shall be applied using power operated spray equipment. The power operated spraying equipment shall be equipped with an operational pressure gage and a means of controlling the pressure. Hand spraying of small and irregular areas that are not reasonably accessible to mechanical spraying equipment, in the opinion of the Engineer, may be permitted.

The curing compound shall be applied to the concrete following the surface finishing operation, immediately before the moisture sheen disappears from the surface, but before any drying shrinkage or craze cracks begin to appear. In the event of any drying or cracking of the surface, application of water with an atomizing nozzle as specified in Section 90-7.01A, "Water Method," shall be started immediately and shall be continued until application of the compound is resumed or started; however, the compound shall not be applied over any resulting freestanding water. Should the film of compound be damaged from any cause before the expiration of 7 days after the concrete is placed in the case of structures and 72 hours in the case of pavement, the damaged portion shall be repaired immediately with additional compound.

At the time of use, compounds containing pigments shall be in a thoroughly mixed condition with the pigment uniformly dispersed throughout the vehicle. A paddle shall be used to loosen all settled pigment from the bottom of the container, and a power driven agitator shall be used to disperse the pigment uniformly throughout the vehicle.

Agitation shall not introduce air or other foreign substance into the curing compound.

The manufacturer shall include in the curing compound the necessary additives for control of sagging, pigment settling, leveling, de-emulsification, or other requisite qualities of a satisfactory working material. Pigmented curing compounds shall be manufactured so that the pigment does not settle badly, does not cake or thicken in the container, and does not become granular or curdled. Settlement of pigment shall be a thoroughly wetted, soft, mushy mass permitting the complete and easy vertical penetration of a paddle. Settled pigment shall be easily redispersed, with minimum resistance to the sideways manual motion of the paddle across the bottom of the container, to form a smooth uniform product of the proper consistency.

Curing compounds shall remain sprayable at temperatures above 40° F and shall not be diluted or altered after manufacture.

The curing compound shall be packaged in clean 274-gallon totes, 55-gallon barrels or 5-gallon pails or shall be supplied from a suitable storage tank located at the jobsite. The containers shall comply with "Title 49, Code of Federal Regulations, Hazardous Materials Regulations." The 274-gallon totes and the 55-gallon barrels shall have removable lids and airtight fasteners. The 5-gallon pails shall be round and have standard full open head and bail. Lids with bungholes shall not be permitted. Settling or separation of solids in containers, except tanks, must be completely redispersed with low speed mixing prior to use, in conformance with these specifications and the manufacturer's recommendations. Mixing shall be accomplished either manually by use of a paddle or by use of a mixing blade driven by a drill motor, at low speed. Mixing blades shall be the type used for mixing paint. On site storage tanks shall be kept clean and free of contaminants. Each tank shall have a permanent system designed to completely redisperse settled material without introducing air or other foreign substances.

Steel containers and lids shall be lined with a coating that will prevent destructive action by the compound or chemical agents in the air space above the compound. The coating shall not come off the container or lid as skins. Containers shall be filled in a manner that will prevent skinning. Plastic containers shall not react with the compound.

Each container shall be labeled with the manufacturer's name, kind of curing compound, batch number, volume, date of manufacture, and volatile organic compound (VOC) content. The label shall also warn that the curing compound containing pigment shall be well stirred before use. Precautions concerning the handling and the application of curing compound shall be shown on the label of the curing compound containers in conformance with the Construction Safety Orders and General Industry Safety Orders of the State of California.

Containers of curing compound shall be labeled to indicate that the contents fully comply with the rules and regulations concerning air pollution control in the State of California. When the curing compound is shipped in tanks or tank trucks, a shipping invoice shall accompany each load. The invoice shall contain the same information as that required herein for container labels.

Curing compound will be sampled by the Engineer at the source of supply or at the jobsite or at both locations.

Curing compound shall be formulated so as to maintain the specified properties for a minimum of one year. The Engineer may require additional testing before use to determine compliance with these specifications if the compound has not been used within one year or whenever the Engineer has reason to believe the compound is no longer satisfactory.

Tests will be conducted in conformance with the latest ASTM test methods and methods in use by the Transportation Laboratory.

90-7.01C Waterproof Membrane Method
The exposed finished surfaces of concrete shall be sprayed with water, using a nozzle that so atomizes the flow that a mist and not a spray is formed, until the concrete has set, after which the curing membrane shall be placed. The curing membrane shall remain in place for a period of not less than 72 hours.

Sheeting material for curing concrete shall conform to the requirements in AASHTO Designation: M 171 for white reflective materials.

The sheeting material shall be fabricated into sheets of such width as to provide a complete cover for the entire concrete surface. Joints in the sheets shall be securely cemented together in such a manner as to provide a waterproof joint. The joint seams shall have a minimum lap of 0.33-foot.

The sheets shall be securely weighted down by placing a bank of earth on the edges of the sheets or by other means satisfactory to the Engineer.

Should any portion of the sheets be broken or damaged before the expiration of 72 hours after being placed, the broken or damaged portions shall be immediately repaired with new sheets properly cemented into place.

Sections of membrane that have lost their waterproof qualities or have been damaged to such an extent as to render them unfit for curing the concrete shall not be used.

90-7.01D Forms-In-Place Method
Formed surfaces of concrete may be cured by retaining the forms in place. The forms shall remain in place for a minimum period of 7 days after the concrete has been placed, except that for members over 20 inches in least dimension the forms shall remain in place for a minimum period of 5 days.

Joints in the forms and the joints between the end of forms and concrete shall be kept moisture tight during the curing period. Cracks in the forms and cracks between the forms and the concrete shall be resealed by methods subject to the approval of the Engineer.

90-7.02 CURING PAVEMENT
The entire exposed area of the pavement, including edges, shall be cured by the waterproof membrane method, or curing compound method using curing compound (1) or (2) as the Contractor may elect. Should the side forms be removed before the expiration of 72 hours following the start of curing, the

exposed pavement edges shall also be cured. If the pavement is cured by means of the curing compound method, the sawcut and all portions of the curing compound that have been disturbed by sawing operations shall be restored by spraying with additional curing compound.

Curing shall commence as soon as the finishing process provided in Section 40-1.10, "Final Finishing," has been completed. The method selected shall conform to the provisions in Section 90-7.01, "Methods of Curing."

When the curing compound method is used, the compound shall be applied to the entire pavement surface by mechanical sprayers. Spraying equipment shall be of the fully atomizing type equipped with a tank agitator that provides for continual agitation of the curing compound during the time of application. The spray shall be adequately protected against wind, and the nozzles shall be so oriented or moved mechanically transversely as to result in the minimum specified rate of coverage being applied uniformly on exposed faces. Hand spraying of small and irregular areas, and areas inaccessible to mechanical spraying equipment, in the opinion of the Engineer, will be permitted. When the ambient air temperature is above 60° F, the Contractor shall fog the surface of the concrete with a fine spray of water as specified in Section 90-7.01A, "Water Method." The surface of the pavement shall be kept moist between the hours of 10:00 a.m. and 4:30 p.m. on the day the concrete is placed. However, the fogging done after the curing compound has been applied shall not begin until the compound has set sufficiently to prevent displacement. Fogging shall be discontinued if ordered in writing by the Engineer.

90-7.03 CURING STRUCTURES

Newly placed concrete for cast-in-place structures, other than highway bridge decks, shall be cured by the water method, the forms-in-place method, or, as permitted herein, by the curing compound method, in conformance with the provisions in Section 90-7.01, "Methods of Curing."

The curing compound method using a pigmented curing compound may be used on concrete surfaces of construction joints, surfaces that are to be buried underground, and surfaces where only Ordinary Surface Finish is to be applied and on which a uniform color is not required and that will not be visible from a public traveled way. If the Contractor elects to use the curing compound method on the bottom slab of box girder spans, the curing compound shall be curing compound (1).

The top surface of highway bridge decks shall be cured by both the curing compound method and the water method. The curing compound shall be curing compound (1).

Concrete surfaces of minor structures, as defined in Section 51-1.02, "Minor Structures," shall be cured by the water method, the forms-in-place method or the curing compound method.

When deemed necessary by the Engineer during periods of hot weather, water shall be applied to concrete surfaces being cured by the curing compound method or by the forms-in-place method, until the Engineer determines that a cooling effect is no longer required.

90-7.04 CURING PRECAST CONCRETE MEMBERS

Precast concrete members shall be cured in conformance with any of the methods specified in Section 90-7.01, "Methods of Curing." Curing shall be provided for the minimum time specified for each method or until the concrete reaches its design strength, whichever is less. Steam curing may also be used for precast members and shall conform to the following provisions:

A. After placement of the concrete, members shall be held for a minimum 4-hour presteaming period. If the ambient air temperature is below 50° F, steam shall be applied during the presteaming period to hold the air surrounding the member at a temperature between 50° F and 90° F.

B. To prevent moisture loss on exposed surfaces during the presteaming period, members shall be covered as soon as possible after casting or the exposed surfaces shall be kept wet by fog spray or wet blankets.

C. Enclosures for steam curing shall allow free circulation of steam about the member and shall be constructed to contain the live steam with a minimum moisture loss. The use of tarpaulins or similar flexible covers will be permitted, provided they are kept in good repair and secured in such a manner as to prevent the loss of steam and moisture.

D. Steam at the jets shall be at low pressure and in a saturated condition. Steam jets shall not impinge directly on the concrete, test cylinders, or forms. During application of the steam, the temperature rise within the enclosure shall not exceed 40° F per hour. The curing temperature throughout the enclosure shall not exceed 150° F and shall be maintained at a constant level for a sufficient time necessary to develop the required transfer strength. Control cylinders shall be covered to prevent moisture loss and shall be placed in a location where temperature is representative of the average temperature of the enclosure.

E. Temperature recording devices that will provide an accurate, continuous, permanent record of the curing temperature shall be provided. A minimum of one temperature recording device per 200 feet of continuous bed length will be required for checking temperature.

F. Members in pretension beds shall be detensioned immediately after the termination of steam curing while the concrete and forms are still warm, or the temperature under the enclosure shall be maintained above 60° F until the stress is transferred to the concrete.

G. Curing of precast concrete will be considered completed after termination of the steam curing cycle.

90-7.05 CURING PRECAST PRESTRESSED CONCRETE PILES

Newly placed concrete for precast prestressed concrete piles shall be cured in conformance with the provisions in Section 90-7.04, "Curing Precast Concrete Members," except that piles with a class designation ending in C (corrosion resistant) shall be cured as follows:

A. Piles shall be either steam cured or water cured. If water curing is used, the piles shall be kept continuously wet by the application of water in conformance with the provisions in Section 90-7.01A, "Water Method."

B. If steam curing is used, the steam curing provisions in Section 90-7.04, "Curing Precast Concrete Members," shall apply except that the piles shall be kept continuously wet for their entire length for a period of not less than 3 days, including the holding and steam curing periods.

90-7.06 CURING SLOPE PROTECTION

Concrete slope protection shall be cured in conformance with any of the methods specified in Section 90-7.01, "Methods of Curing."

Concreted-rock slope protection shall be cured in conformance with any of the methods specified in Section 90-7.01, "Methods of Curing," or with a blanket of earth kept wet for 72 hours, or by sprinkling with a fine spray of water every 2 hours during the daytime for a period of 3 days.

90-7.07 CURING MISCELLANEOUS CONCRETE WORK

Exposed surfaces of curbs shall be cured by pigmented curing compounds as specified in Section 90-7.01B, "Curing Compound Method."

Concrete sidewalks, gutter depressions, island paving, curb ramps, driveways, and other miscellaneous concrete areas shall be cured in conformance with any of the methods specified in Section 90-7.01, "Methods of Curing."

Shotcrete shall be cured for at least 72 hours by spraying with water, or by a moist earth blanket, or by any of the methods provided in Section 90-7.01, "Methods of Curing."

Mortar and grout shall be cured by keeping the surface damp for 3 days.

After placing, the exposed surfaces of sign structure foundations, including pedestal portions, if constructed, shall be cured for at least 72 hours by spraying with water, or by a moist earth blanket, or by any of the methods provided in Section 90-7.01, "Methods of Curing."

90-8 PROTECTING CONCRETE

90-8.01 GENERAL

In addition to the provisions in Section 7-1.16, "Contractor's Responsibility for the Work and Materials," the Contractor shall protect concrete as provided in this Section 90-8.

Concrete shall not be placed on frozen or ice-coated ground or subgrade nor on ice-coated forms, reinforcing steel, structural steel, conduits, precast members, or construction joints.

Under rainy conditions, placing of concrete shall be stopped before the quantity of surface water is sufficient to damage surface mortar or cause a flow or wash of the concrete surface, unless the Contractor provides adequate protection against damage.

Concrete that has been frozen or damaged by other causes, as determined by the Engineer, shall be removed and replaced by the Contractor at the Contractor's expense.

90-8.02 PROTECTING CONCRETE STRUCTURES

Structure concrete and shotcrete used as structure concrete shall be maintained at a temperature of not less than 45° F for 72 hours after placing and at not less than 40° F for an additional 4 days. When required by the Engineer, the Contractor shall submit a written outline of the proposed methods for protecting the concrete.

90-8.03 PROTECTING CONCRETE PAVEMENT

Pavement concrete shall be maintained at a temperature of not less than 40° F for 72 hours. When required by the Engineer, the Contractor shall submit a written outline of the proposed methods for protecting the concrete.

Except as provided in Section 7-1.08, "Public Convenience," the Contractor shall protect concrete pavement against construction and other activities that abrade, scar, discolor, reduce texture depth, lower coefficient of friction, or otherwise damage the surface. Stockpiling, drifting, or excessive spillage of soil, gravel, petroleum products, and concrete or asphalt mixes on the surface of concrete pavement is prohibited unless otherwise specified in these specifications, the special provisions or permitted by the Engineer.

When ordered by the Engineer or shown on the plans or specified in the special provisions, pavement crossings shall be constructed for the convenience of public traffic. Where public traffic will be required to cross over the new pavement, Type III portland cement may be used in concrete, if permitted in writing by the Engineer. The pavement may be opened to traffic as soon as the concrete has developed a modulus of rupture of 550 pounds per square inch. The modulus of rupture will be determined by California Test 523.

No traffic or Contractor's equipment, except as hereinafter provided, will be permitted on the pavement before a period of 10 days has elapsed after the concrete has been placed, nor before the concrete has developed a modulus of rupture of at least 550 pounds per square inch. Concrete that fails to attain a modulus of rupture of 550 pounds per square inch within 10 days shall not be opened to traffic until directed by the Engineer.

Equipment for sawing weakened plane joints will be permitted on the pavement as specified in Section 40-1.08B, "Weakened Plane Joints."

When requested in writing by the Contractor, the tracks on one side of paving equipment will be permitted on the pavement after a modulus of rupture of 2.4 MPa has been attained, provided that:

A. Unit pressure exerted on the pavement by the paver shall not exceed 20 pounds per square inch;

B. Tracks with cleats, grousers, or similar protuberances shall be modified or shall travel on planks or equivalent protective material, so that the pavement is not damaged; and

C. No part of the track shall be closer than one foot from the edge of pavement. In case of visible cracking of, or other damage to the pavement, operation of the paving equipment on the pavement shall be immediately discontinued.

Damage to the pavement resulting from early use of pavement by the Contractor's equipment as provided above shall be repaired by the Contractor at the Contractor's expense.
The State will furnish the molds and machines for testing the concrete for modulus of rupture, and the Contractor, at the Contractor's expense, shall furnish the material and whatever labor the Engineer may require.

90-9 COMPRESSIVE STRENGTH

90-9.01 GENERAL

Concrete compressive strength requirements consist of a minimum strength that shall be attained before various loads or stresses are applied to the concrete and, for concrete designated by strength, a minimum strength at the age of 28 days or at the age otherwise allowed in Section 90-1.01,

"Description." The various strengths required are specified in these specifications or the special provisions or are shown on the plans.

The compressive strength of concrete will be determined from test cylinders that have been fabricated from concrete sampled in conformance with the requirements of California Test 539. Test cylinders will be molded and initially field cured in conformance with California Test 540. Test cylinders will be cured and tested after receipt at the testing laboratory in conformance with the requirements of California Test 521. A strength test shall consist of the average strength of 2 cylinders fabricated from material taken from a single load of concrete, except that, if any cylinder should show evidence of improper sampling, molding, or testing, that cylinder shall be discarded and the strength test shall consist of the strength of the remaining cylinder.

When concrete compressive strength is specified as a prerequisite to applying loads or stresses to a concrete structure or member, test cylinders for other than steam cured concrete will be cured in conformance with Method 1 of California Test 540. The compressive strength of concrete determined for these purposes will be evaluated on the basis of individual tests.

When concrete is designated by 28-day compressive strength rather than by cementitious material content, the concrete strength to be used as a basis for acceptance of other than steam cured concrete will be determined from cylinders cured in conformance with Method 1 of California Test 540. If the result of a single compressive strength test at the maximum age specified or allowed is below the specified strength but is 95 percent or more of the specified strength, the Contractor shall, at the Contractor's expense, make corrective changes, subject to approval of the Engineer, in the mix proportions or in the concrete fabrication procedures, before placing additional concrete, and shall pay to the State $10 for each in-place cubicyard of concrete represented by the deficient test. If the result of a single compressive strength test at the maximum age specified or allowed is below 95 percent of the specified strength, but is 85 percent or more of the specified strength, the Contractor shall make the corrective changes specified above, and shall pay to the State $15 for each in-place cubic yard of concrete represented by the deficient test. In addition, such corrective changes shall be made when the compressive strength of concrete tested at 7 days indicates, in the judgment of the Engineer, that the concrete will not attain the required compressive strength at the maximum age specified or allowed. Concrete represented by a single test that indicates a compressive strength of less than 85 percent of the specified 28-day compressive strength will be rejected in conformance with the provisions in Section 6-1.04, "Defective Materials."

If the test result indicates that the compressive strength at the maximum curing age specified or allowed is below the specified strength, but is 85 percent or more of the specified strength, payments to the State as required above shall be made, unless the Contractor, at the Contractor's expense, obtains and submits evidence acceptable to the Engineer that the strength of the concrete placed in the work meets or exceeds the specified 28-day compressive strength. If the test result indicates a compressive strength at the maximum curing age specified or allowed below 85 percent, the concrete represented by that test will be rejected, unless the Contractor, at the Contractor's expense, obtains and submits evidence acceptable to the Engineer that the strength and quality of the concrete placed in the work are acceptable. If the evidence consists of tests made on cores taken from the work, the cores shall be obtained and tested in conformance with the requirements in ASTM Designation: C 42.

No single compressive strength test shall represent more than 325 cubic yards.

When a precast concrete member is steam cured, the compressive strength of the concrete will be determined from test cylinders that have been handled and stored in conformance with Method 3 of California Test 540. The compressive strength of steam cured concrete will be evaluated on the basis of individual tests representing specific portions of production. When the concrete is designated by 28-day compressive strength rather than by cementitious material content, the concrete shall be considered to be acceptable whenever its compressive strength reaches the specified 28-day compressive strength provided that strength is reached in not more than the maximum number of days specified or allowed after the member is cast.

When concrete is specified by compressive strength, prequalification of materials, mix proportions, mixing equipment, and procedures proposed for use will be required prior to placement of the concrete. Prequalification shall be accomplished by the submission of acceptable certified test data or trial batch reports by the Contractor. Prequalification data shall be based on the use of materials, mix proportions, mixing equipment, procedures, and size of batch proposed for use in the work.

Certified test data, in order to be acceptable, shall indicate that not less than 90 percent of at least 20 consecutive tests exceed the specified strength at the maximum number of cure days specified or allowed, and none of those tests are less than 95 percent of specified strength. Strength tests included in the data shall be the most recent tests made on concrete of the proposed mix design and all shall have been made within one year of the proposed use of the concrete.

Trial batch test reports, in order to be acceptable, shall indicate that the average compressive strength of 5 consecutive concrete cylinders, taken from a single batch, at not more than 28 days (or the maximum age allowed) after molding shall be at least 600 pounds per square inch greater than the specified 28-day compressive strength, and no individual cylinder shall have a strength less than the specified strength at the maximum age specified or allowed. Data contained in the report shall be from trial batches that were produced within one year of the proposed use of specified strength concrete in the project. Whenever air-entrainment is required, the air content of trial batches shall be equal to or greater than the air content specified for the concrete without reduction due to tolerances.

Tests shall be performed in conformance with either the appropriate California Test methods or the comparable ASTM test methods. Equipment employed in testing shall be in good condition and shall be properly calibrated. If the tests are performed during the life of the contract, the Engineer shall be notified sufficiently in advance of performing the tests in order to witness the test procedures.

The certified test data and trial batch test reports shall include the following information:

A. Date of mixing.

B. Mixing equipment and procedures used.

C. The size of batch in cubic yards and the mass, type, and source of all ingredients used.

D. Penetration of the concrete.

E. The air content of the concrete if an air-entraining admixture is used.

F. The age at time of testing and strength of all concrete cylinders tested.

Certified test data and trial batch test reports shall be signed by an official of the firm that performed the tests.

When approved by the Engineer, concrete from trial batches may be used in the work at locations where concrete of a lower quality is required.

After materials, mix proportions, mixing equipment, and procedures for concrete have been prequalified for use, additional prequalification by testing of trial batches will be required prior to making changes that, in the judgment of the Engineer, could result in a strength of concrete below that specified.

The Contractor's attention is directed to the time required to test trial batches and the Contractor shall be responsible for production of trial batches at a sufficiently early date so that the progress of the work is not delayed.

When precast concrete members are manufactured at the plant of an established manufacturer of precast concrete members, the mix proportions of the concrete shall be determined by the Contractor, and a trial batch and prequalification of the materials, mix proportions, mixing equipment, and procedures will not be required.

90-10 MINOR CONCRETE

90-10.01 GENERAL

Concrete for minor structures, slope paving, curbs, sidewalks and other concrete work, when designated as minor concrete on the plans, in the specifications, or in the contract item, shall conform to the provisions specified herein.

The Engineer, at the Engineer's discretion, will inspect and test the facilities, materials and methods for producing the concrete to ensure that minor concrete of the quality suitable for use in the work is obtained.

90-10.02 MATERIALS

Minor concrete shall conform to the following requirements:

90-10.02A Cementitious Material

Cementitious material shall conform to the provisions in Section 90-1.01, "Description."

90-10.02B Aggregate

Aggregate shall be clean and free from deleterious coatings, clay balls, roots, and other extraneous materials.

The Contractor shall submit to the Engineer for approval, a grading of the combined aggregate proposed for use in the minor concrete. After acceptance of the grading, aggregate furnished for minor concrete shall conform to that grading, unless a change is authorized in writing by the Engineer.

The Engineer may require the Contractor to furnish periodic test reports of the aggregate grading furnished. The maximum size of aggregate used shall be at the option of the Contractor, but in no case shall the maximum size be larger than 1 1/2-inch or smaller than 3/4-inch.

The Engineer may waive, in writing, the gradation requirements in this Section 90-10.02B, if, in the Engineer's opinion, the furnishing of the gradation is not necessary for the type or amount of concrete work to be constructed.

90-10.02C Water
Water used for washing, mixing, and curing shall be free from oil, salts, and other impurities that would discolor or etch the surface or have an adverse affect on the quality of the concrete. 90-10.02D Admixtures The use of admixtures shall conform to the provisions in Section 90-4, "Admixtures."

90-10.03 PRODUCTION
Cementitious material, water, aggregate, and admixtures shall be stored, proportioned, mixed, transported, and discharged in conformance with recognized standards of good practice that will result in concrete that is thoroughly and uniformly mixed, that is suitable for the use intended, and that conforms to requirements specified herein. Recognized standards of good practice are outlined in various industry publications such as are issued by American Concrete Institute, AASHTO, or the Department.

The cementitious material content of minor concrete shall conform to the provisions in Section 90-1.01, "Description."

The amount of water used shall result in a consistency of concrete conforming to the provisions in Section 90-6.06, "Amount of Water and Penetration." Additional mixing water shall not be incorporated into the concrete during hauling or after arrival at the delivery point, unless authorized by the Engineer.

Discharge of ready-mixed concrete from the transporting vehicle shall be made while the concrete is still plastic and before stiffening occurs. An elapsed time of 1.5 hours (one hour in non-agitating hauling equipment), or more than 250 revolutions of the drum or blades, after the introduction of the cementitious material to the aggregates, or a temperature of concrete of more than 90° F will be considered conditions contributing to the quick stiffening of concrete. The Contractor shall take whatever action is necessary to eliminate quick stiffening, except that the addition of water will not be permitted.

The required mixing time in stationary mixers shall be not less than 50 seconds or more than 5 minutes.

The minimum required revolutions at mixing speed for transit-mixed concrete shall be not less than that recommended by the mixer manufacturer, and shall be increased, if necessary, to produce thoroughly and uniformly mixed concrete.

Each load of ready-mixed concrete shall be accompanied by a weighmaster certificate that shall be delivered to the Engineer at the discharge location of the concrete, unless otherwise directed by the Engineer. The weighmaster certificate shall be clearly marked with the date and time of day when the load left the batching plant and, if hauled in truck mixers or agitators, the time the mixing cycle started.

A Certificate of Compliance conforming to the provisions in Section 6–1.07, "Certificates of Compliance," shall be furnished to the Engineer, prior to placing minor concrete from a source not previously used on the contract, stating that minor concrete to be furnished meets contract requirements, including minimum cementitious material content specified.

90-10.04 CURING MINOR CONCRETE
Curing minor concrete shall conform to the provisions in Section 90-7, "Curing Concrete."

90-10.05 PROTECTING MINOR CONCRETE
Protecting minor concrete shall conform to the provisions in Section 90-8, "Protecting Concrete," except the concrete shall be maintained at a temperature of not less than 40° F for 72 hours after placing.

SECTION 100. TEMPORARY PAVEMENT DELINEATION

100-1.01 DESCRIPTION
Temporary pavement delineation shall be furnished, placed, maintained, and removed in conformance with the provisions in Section 12, "Construction Area Traffic Control Devices," of the Standard Specifications and these Special Provisions. Nothing in these Special Provisions shall be construed as reducing the minimum standards specified in the California MUTCD or as relieving the Contractor from the responsibilities specified in Section 7-1.09, "Public Safety," of the Standard Specifications.

100-1.02 GENERAL
Whenever the work causes obliteration of pavement delineation, temporary or permanent pavement delineation shall be in place prior to opening the traveled way to public traffic. Laneline or centerline pavement delineation and pavement markings shall be provided at all times for traveled ways open to public traffic, paint shall be dry prior to opening the lane or street.

Work necessary, including required lines or marks, to establish the alignment of temporary pavement delineation shall be performed by the Contractor. Surfaces to receive temporary pavement delineation shall be dry and free of dirt and loose material. Temporary pavement delineation shall not be applied over existing pavement delineation or other temporary pavement delineation. Temporary pavement delineation shall be maintained until superseded or replaced with a new pattern of temporary pavement delineation or permanent pavement delineation.

Temporary painted pavement markers and removable traffic tape which conflicts with a new traffic pattern or which is applied to the final layer of surfacing or existing pavement to remain in place shall be removed when no longer required for the direction of public traffic, as determined by the Engineer. Temporary tabs must be removed before the application of any slurry product.

100-1.03 TEMPORARY LANELINE AND CENTERLINE DELINEATION--PAINT
Whenever existing thermoplastic traffic stripes, pavement markings and pavement markers are obliterated the minimum temporary pavement delineation to be provided shall be a single coat of waterborne traffic line paint applied in conformance with Sections 84-1, “General,” and 84-3, “Painted Traffic Stripes and Pavement Markings,” of the State Standard Specifications and these Special Provisions.

Temporary striping traffic paint shall be placed in three stages of work; temporary traffic stripping shall be placed after existing thermoplastic striping is removed, after chip seal placement, and after slurry seal placement. In addition, after any existing thermoplastic pavement stripping and markings and pavement markers or temporary paint has been obliterated by Chip and Slurry Seal operations, another (single) coat of waterborne traffic line paint shall be installed prior to opening the traveled way to public traffic or as determined by the Engineer. No significant difference in alignment between this second coat of temporary paint and the final thermoplastic stripes and markings will be allowed. If, in the opinion of the Engineer, a misalignment exists it shall be repaired to the satisfaction of the Engineer. The temporary paint shall be the same color as the laneline or centerline the markers replace.

The temporary paint shall be applied at an approximate rate of one gallon per 215 square feet.

The use of temporary raised pavement markings will only be permitted for use after the slurry seal is placed and shall only be used for lane line delineation, and shall be placed with adhesive, nailing is not permitted. All raised pavement markers shall be removed prior to the placement of Thermoplastic traffic stripes and pavement markings are installed.

The use of temporary raised pavement markers will not be permitted wherever permanent thermoplastic traffic stripes or pavement markers or markings are to be installed.

Temporary laneline or centerline delineation consisting entirely of painted pavement markers placed on longitudinal intervals of not more than 24 feet shall be used on lanes open to public traffic for a maximum of 14 days. Prior to the end of the 14 days, the permanent pavement delineation shall be placed. If the permanent pavement delineation is not placed within the 14 days, additional temporary pavement delineation shall be provided at the Contractor's expense. The additional temporary pavement delineation to be provided shall be equivalent to the pattern specified for the permanent pavement delineation for the area, as determined by the Engineer.

100-1.04 TEMPORARY EDGELINE DELINEATION

Whenever edgelines (including golf cart lane lines and/or bike lane lines) are obliterated, the edgeline delineation to be provided for that area adjacent to lanes open to public traffic shall consist of a solid 4 inch wide traffic stripe of the same color as the stripe the temporary edgeline delineation replaces.

Traffic stripe (4 inch wide) placed for temporary edgeline delineation shall be applied in conformance with the manufacturer's recommendations.

Temporary edgeline delineation shall be removed when no longer required for the direction of public traffic, as determined by the Engineer or when the permanent pavement delineation is installed.

100-1.05 MEASUREMENT

The quantity Temporary Laneline AND Centerline Delineation—paint and Temporary Edgeline Delineation of will be measured as units determined from actual count in place and paid for with lump sum. Pavement marker will be lump sum for Traffic Stripes, Pavement Markings, and Pavement Markers as shown on the plans and the Temporary Paint for Traffic Stripes, Pavement Markings, and Pavement Markers on the remainder of the project as shown on the plans.

100-1.06 PAYMENT

Full compensation for furnishing, placing, maintaining, and removing temporary paint striping used for temporary laneline and centerline delineation and for providing equivalent patterns of permanent traffic lines for these areas when required shall be considered as included in the contract prices paid for "Install Temporary Paint for Traffic Stripes, Pavement Markings, and Pavement Markers" and shall include labor, materials, disposal, layout, and incidental for doing the work and for and no separate payment will be made therefore.

BID FORM A - ALTERNATIVES

(ATTACH SEALED ENVELOPE WITH
BID FORM B ENCLOSED TO BACK OF THIS FORM)

TO: The City of Colfax, State of California:

1. Pursuant to and in compliance with your Notice to Bidders and Contract Documents, relating to the _____ including Addenda Nos. _____ the undersigned bidder, having become thoroughly familiar with the terms and conditions of the Contract Documents and place where the work is to be done, hereby proposes and agrees to fully perform the work within the time stated and in strict accordance with the Contract Documents (including the furnishing of any and all labor, materials, tools, expendable equipment, and utility and transportation services necessary to fully perform the work and complete it in a workmanlike manner) for the total Base Bid sum of _____ DOLLARS ($_____).

Alternatives:

1. _____

_____

2. _____

_____

3. _____

_____

THIS FORM IS TO BE FULLY COMPLETED, SIGNED AND SUBMITTED IN A SEALED ENVELOPE ATTACHED TO BID FORM A

BID FORM B - ALTERNATIVES

FROM:_____
Name of Bidder

TO: The City of Colfax, State of California:

1. Pursuant to and in compliance with your Notice to Bidders and Contract Documents, relating to the _____ including Addenda Nos. _____ the undersigned bidder, having become thoroughly familiar with the terms and conditions of the Contract Documents and place where the work is to be done, hereby proposes and agrees to fully perform the work within the time stated and in strict accordance with the Contract Documents (including the furnishing of any and all labor, materials, tools, expendable equipment, and utility and transportation services necessary to fully perform the work and complete it in a workmanlike manner) for the total sum indicated in Bid Form A submitted simultaneously with this bid form.

2. It is understood that City reserves the right to reject this proposal and that it shall remain open and not be withdrawn for a period of sixty (60) days from the date prescribed for its opening.

3. Attached hereto and incorporated herein, in compliance with sections 4100-4114 of the Public Contracts Code of the State of California, is a "Designation of Subcontractors."

4. It is understood and agreed that if written notice of the acceptance of this proposal is mailed or delivered personally to the undersigned bidder within sixty (60) days after the opening of the proposal, or at any time thereafter before it is withdrawn, the undersigned bidder will execute and deliver the Contract Documents to City in accordance with the proposal as accepted, together with the insurance documents specified in Article 3 of the General Conditions and will also furnish and deliver to City the Performance Bond and Payment Bond as herein specified, all within ten (10) days after personal delivery or deposit in the mails, as the case may be, of the notification of award and that the work under the contract shall be commenced by the undersigned bidder on the date to be stated in City's notice to proceed, and shall be

completed in the time specified in section 2 of the agreement for construction or any modification thereto duly made by change order.

5. Notice of acceptance or request for additional information may be addressed to the undersigned bidder at the business address set forth below.

_____

_____

_____

_____

6. The undersigned bidder declares as follows: The bid is not made in the interest of, or on behalf of, any undisclosed person, partnership, company, association, organization, or corporation. The bid is genuine and not collusive or sham. The bidder has not directly or indirectly induced or solicited any other bidder to put in a false or sham bid. The bidder has not directly or indirectly colluded, conspired, connived, or agreed with any bidder or anyone else to put in a sham bid, or to refrain from bidding. The bidder has not in any manner, directly or indirectly, sought by agreement, communication, or conference with anyone to fix the bid price of the bidder or any other bidder, or to fix any overhead, profit, or cost element of the bid price, or of that of any other bidder. All statements contained in the bid are true. The bidder has not, directly or indirectly, submitted his or her bid price or any breakdown thereof, or the contents thereof, or divulged information or data relative thereto, to any corporation, partnership, company, association, organization, bid depository, or to any member or agent thereof, to effectuate a collusive or sham bid, and has not paid, and will not pay, any person or entity for such purpose.

7. Any person executing this declaration on behalf of a bidder that is a corporation, partnership, joint venture, limited liability company, limited liability partnership, or any other entity, hereby represents that he or she has full power to execute, and does execute, this declaration on behalf of the bidder.

8. The undersigned bidder declares that the bidder is aware of the provisions of section 3700 of the Labor Code which require every employer to be insured against liability for workers' compensations or to undertake self insurance in accordance with the provisions of that code, and that the bidder will comply with such provisions before commencing the performance of the work of this contract.

9. Wherever in this proposal an amount is stated in both words and figures, in case of discrepancy, the words shall prevail; if all or any portions of the proposal is required to be given in unit prices and totals and a discrepancy exists between any such unit prices and totals so given, the unit prices shall prevail.

10. Accompanying this proposed bid is _____ (insert words, "cash," "cashier's check," "certified check," or "bidders bond," as the case may be) in an amount equal to at least ten percent (10%) of total of the bid including the highest alternate.

11. The names of all persons interested in the foregoing proposal as principals are as follows:

(Stockholders and limited partners need not be listed unless they are officers or employees of the corporation or limited partnership. All general partners and corporate officers shall be listed. If a stockholder or partner is a firm, list the principles of that firm, as stated herein.)

(If bidder or other interested person is a corporation, it must furnish a certificate attesting to corporate existence and authority of officers to sign contracts and other documents. A form corporate certificate is included in these bid documents. State legal name of corporation, names of the president, secretary, treasurer, and manager thereof.)

NAME	BUSINESS ADDRESS	INTEREST (owner, partner,etc.)

Attach additional sheets if necessary.

12. The name of the person licensed in accordance with the Notice of Bidders and the Contractor's State License Law, Business and Professions Code section 7000 et seq., and that person's relationship to the Bidder, are as follows:

Name of License Holder: _____.

Relationship to Bidder: _____.
License No.: _____.

License Expiration Date: _____.

Type of License: _____.

The undersigned declares under penalty of perjury under the laws of the State of California that the foregoing information and representations made in this bid are true and correct.

DATED:_____

Signature of Bidder:

_____
Company Name

_____
Street Address

_____
City, State, Zip

(_____)_____
Telephone

(_____)_____
Fax

By_____

Its_____

_____
(Type Name)

By_____

Its_____

_____
(Type Name) (CORPORATE SEAL)

NOTE: If bidder is a corporation, the legal name of the corporation shall be set forth above together with the signature of the officer or officers authorized to sign contracts on behalf of the corporation and a corporate seal; if bidder is a copartnership, the true names of the firm shall be set forth above together with the signature of the partner of partners authorized to sign contracts on behalf of the copartnership; and if bidder is an individual, his or her signature shall be placed above.

BID ITEMS FOR
PEDESTRIAN AND ADA IMPROVEMENTS TO COLFAX TRANSIT CENTER PROJECT
(EAST OAK STREET SIDEWALK IMPROVEMENTS)

Item No.*	Item Description	Unit	Estimated Quantity	Unit Price	Total Amount
1	MOBILIZATION	L.S.	1		
2	PLACE AND MAINTAIN BMPs	L.S.	1		
3	PAVEMENT REMOVAL/REPLACEMENT, CONCRETE PLACEMENT	--------	----------	----------	----------
3A	REMOVE EXISTING PAVEMENT	L.F.	512		
3B	INSTALL CONCRETE	L.F.	512		
3C	INSTALL ASPHALT	L.F.	512		
4	TRAFFIC CONTROL AND MAINTENANCE	L.S.	1		
5	WATER POLLUTION CONTROL	L.S.	1		
SUBMIT THIS SHEET AS PART OF YOUR BID				**TOTAL BASE BID**	$

TOTAL BID:

_____**DOLLARS**

(Transfer this amount to Page 1 of the Bid Form)

NOTES:

1. Failure to transfer the Total Bid amount shown on this form to Page 1 of the Bid Form may result in disqualification.
2. The quantities given in the proposal and contract are approximate only, being given as a basis for the comparison of bids. The City does not, expressly or by implication, agree that the actual amount of work will correspond therewith, and reserves the right to increase or decrease the amount of any class or portion of the work, or to omit portions of the work, as may be deemed necessary or advisable by the Project Manager. If any quantities are found to be incorrect, the Contractor must notify the Project Manager prior to submitting the bids. Contractor's proposal is for the installation of the correct quantities of materials necessary to complete the work.
3. Contractor's attention is directed to the Special Provisions. The Special Provisions contain a detailed description of each bid item.
4. Contractor must submit bids for all base bid items and all alternate bid items. No response or a response of zero on any bid items will be deemed a non-responsive bid.

BIDDER'S BOND

We, _____, as Principal, and _____, as Surety, are held and firmly bound unto the City of Colfax, State of California, (hereinafter called "City) in the sum of ten percent (10%) of the total aggregate amount of the bid of the Principal above named, submitted by said Principal to City for the work described below, for the payment of which sum in lawful money of the United States, well and truly to be made, we bind ourselves, our heirs, executors, administrators, and successors, jointly and severally, firmly by these presents. In no case shall the liability of the Surety hereunder exceed the sum of _____ _____DOLLARS ($_____). The condition of this obligation is such that a bid to City for certain construction specifically described as follows, for which bids are to be opened on _____, 20____, has been submitted by Principal to City:

(Copy here the exact description of work, including location, from bid form):

_____

_____

_____

If the aforesaid Principal shall not withdraw said bid within the period specified therein after the opening of the same, or, if no period be specified, within sixty (60) days after said opening, and shall within the period specified therefore, or, if no period be specified, within ten (10) days after the prescribed forms are presented to him for signature, enter into a written contract with City, in the prescribed form, in accordance with the bid as accepted, and file the two bonds with Owner, one payment for labor and materials, as required by the Contract Documents, then this obligation shall be null and void; otherwise, it shall be and remain in full force, virtue, and effect. And the said Surety, for value received, hereby stipulates and agrees that no change, extension of time, alteration, or addition to the terms of said contract or to the work to be performed thereunder or the specifications accompanying the same shall in any manner affect its obligations on this bond, and it does hereby waive notice of any such change, extension, alteration, or addition.

SUBMIT THIS SHEET AS PART OF YOUR BID

In the event suit is brought upon said bond by City and judgment is recovered, the Surety shall pay all costs incurred by City in such suit, including a reasonable attorneys' fee to be fixed by the Court. Death of the Principal shall not relieve Surety of its obligations hereunder.

IN WITNESS WHEREOF, we have hereunder set our hands and seals on this____ day of _____, 20___.

_____

PRINCIPAL

_____

SURETY

_____

_____

Address

NOTE:

Signatures of those executing for Surety must be properly acknowledged, and a power of attorney attached.

SUBMIT THIS SHEET AS PART OF YOUR BID

CITY OF COLFAX
AGREEMENT FOR THE CONSTRUCTION OF THE
_____

THIS AGREEMENT, made and entered into this _____ day of _____, 20___, by and between the CITY OF COLFAX, a municipal corporation, (hereinafter referred to as "City"), and _____, a [corporation duly organized and existing under the laws of the State of California, or a partnership consisting of _____ or an individual doing business as _____, _____], (hereinafter referred to as "Contractor").

RECITALS

WHEREAS, the City Council of the City of Colfax has awarded a contract to Contractor for performance of the work set forth herein.

AGREEMENTS

SECTION 1 - SCOPE OF WORK

Contractor agrees to furnish all tools, equipment, apparatus, facilities, labor and materials necessary to perform and complete in a good and workmanlike manner, and in strict accordance with the Contract Documents as defined in section 7 hereof, the work of: _____
_____,
City of Colfax, Placer County, California, as called for in the drawings and specifications adopted by the City, which drawings and specifications have been executed by the parties to this agreement. It is understood and agreed that said tools, equipment, apparatus, facilities, labor and materials shall be furnished, and said work performed and completed as required in the Contract Documents, under the direction and supervision of, and subject to the approval of the City and its duly authorized representatives.

SECTION 2 - TIME OF COMPLETION

The work shall be commenced on the date specified in the City's "Notice to Contractor to Proceed," and shall be fully completed no later than _____ days thereafter, or such additional time as may have been provided by change order, pursuant to the Contract Documents.

Time is of the essence of this agreement.

SECTION 3 - CONTRACT PRICE

City shall pay Contractor for the full and complete performance of this contract the sum of_____
_____DOLLARS ($_____), subject to adjustments as provided in the Contract Documents.

SECTION 4 - MONTHLY PROGRESS PAYMENTS

Monthly progress payments shall be made in accordance with Article 23 of the General Conditions of these Contract Documents.

SECTION 5 - FINAL PAYMENT

Final payment shall be made in accordance with Article 25 of the General Conditions of these Contract Documents.

SECTION 6 - ACCEPTANCE OF FINAL PAYMENT AS RELEASE

The acceptance by the Contractor of final payment shall be and shall operate as a release to the City of any and all claims and all liability to the Contractor for all things done or furnished in connection with this work and for every act and/or neglect of the City or others relating to or arising from the work. No payment, however, final or otherwise, shall operate to release the Contractor or his sureties from any obligations under this contract or the performance and payment bonds required by this contract.

SECTION 7 - CONTRACT DOCUMENTS

The complete contract between the parties hereto shall consist of the following documents herein referred to as the "Contract Documents":

Notice and Information to Bidders
Bid Form
Designation of Subcontractors
This Agreement
Bidder's Bond
Performance Bond
Payment Bond
General Conditions
Special Provisions
Contract Drawings and Plans
Technical Specifications
Duly Issued addenda
Duly Issued interpretations
Supplemental Drawings issued pursuant to Article 4 of the General Conditions
Shop Drawings and Manufacturers' Instructions approved pursuant to Article 5 of the General Conditions
Approved Change Orders
Contractor's Guarantee and Warranty & Maintenance Bond

Such documents, collectively referred to herein as the Contract Documents, hereby are incorporated herein by this reference and made a part hereof.

SECTION 8 – CONTRACTOR REGISTERED AND QUALIFIED TO PERFORM PUBLIC WORK

A contractor or subcontractor shall not be qualified to bid on, be listed in a bid proposal, subject to the requirements of Section 4104 of the Public Contract Code, or engage in the performance of any contract for public work, as defined in this chapter, unless currently registered and qualified to perform public work pursuant to Section 1725.5 of the Labor Code. It is not a violation of this section for an unregistered contractor to submit a bid that is authorized by Section 7029.1 of the Business and Professions Code or by Section 10164 or 20103.5 of the Public Contract Code, provided the contractor is registered to perform public work pursuant to Section 1725.5 of the Labor Code at the time the contract is awarded.

IN WITNESS WHEREOF, the parties hereto executed this agreement the day and year first above written.

CITY OF COLFAX

_____
Mark Miller, City Manager

Approved as to form:

_____
Alfred Cabral, City Attorney

Attest:

_____
Lorraine Cassidy, City Clerk

CONTRACTOR

_____
(Name, Title)

_____
(Business Address)

_____
(License Number)

CORPORATE CERTIFICATE

I, _____, certify that I am the Secretary of the corporation named as Contractor in the foregoing agreement; that _____, who signed said agreement on behalf of said corporation is authorized to fully bind the corporation to this agreement; that said agreement was duly signed for and on behalf of said corporation by authority of its governing body and is within the scope of its corporate powers.

(Corporate Seal)

_____
Secretary

LIMITED LIABILITY COMPANY

I, _____, certify that I am the Manager and/or member with management rights of the limited liability company named as Contractor in the foregoing bid; that _____, who signed said agreement on behalf of said limited liability company is authorized to fully bind the limited liability company to this bid; that said bid was duly signed for and on behalf of said limited liability company by authority of its membership and is within the scope of its company powers.

(Corporate Seal)

_____
Manager or Managing Partner

PARTNERSHIP CERTIFICATE

I, _____, certify that I am the _____ of the partnership named as Contractor in the foregoing bid; that _____, who signed said bid on behalf of said partnership is authorized to fully bind the partnership to this agreement; that said bid was duly signed for and on behalf of said partnership by authority of its partners and is within the scope of its partnership powers.

(Seal – if any)

_____
Title:

CORPORATE CERTIFICATE
(BID)

I, _____, certify that I am the Secretary of the corporation named as Contractor in the foregoing bid; that _____, who signed said bid on behalf of said corporation is authorized to fully bind the corporation to this bid; that said bid was duly signed for and on behalf of said corporation by authority of its governing body and is within the scope of its corporate powers.

(Corporate Seal)

_____
Secretary

LIMITED LIABILITY COMPANY
(BID)

I, _____, certify that I am the Manager and/or member with management rights of the limited liability company named as Contractor in the foregoing bid; that _____, who signed said bid on behalf of said limited liability company is authorized to fully bind the limited liability company to this bid; that said bid was duly signed for and on behalf of said limited liability company by authority of its membership and is within the scope of its company powers.

(Corporate Seal)

_____
Manager or Managing Partner

PARTNERSHIP CERTIFICATE
(BID)

I, _____, certify that I am the _____ of the partnership named as Contractor in the foregoing bid; that _____, who signed said bid on behalf of said partnership is authorized to fully bind the partnership to this bid; that said bid was duly signed for and on behalf of said partnership by authority of its partners and is within the scope of its partnership powers.

(Seal – if any)

_____
Title:

SUBMIT THIS SHEET AS PART OF YOUR BID

DESIGNATION OF SUBCONTRACTORS

In compliance with the provisions of section 4100 et seq. of the Public Contracts Code of the State of California, and any amendments thereof, the undersigned bidder has set forth below:

(a) The name, the location of the place of business, and the California contractor license number of each subcontractor who will perform work or labor, or render service to the undersigned in or about the construction of the work to be performed hereunder, or a subcontractor licensed by the State of California, who, under subcontract to the undersigned, will specifically fabricate and install a portion of said work according to detailed drawings contained in the plans and specifications, in an amount in excess of one-half of one percent (0.5%) of the undersigned's total bid, or in the case of construction of streets or highways, including bridges, in excess of one-half of one percent (0.5%) of the undersigned's bid or $10,000, whichever is greater; and

(b) The undersigned shall list only one subcontractor for each portion of the work which will be done by each subcontract as described by (a) above.

Note: When there is a failure to list a subcontractor, the law provides that the prime Contractor agrees to do the work itself, and that said prime Contractor agrees that it is fully qualified to perform such work.

PORTION OF WORK	SUBCONTRACTOR	LICENSE #	DIR #.	ADDRESS

SUBMIT THIS SHEET AS PART OF YOUR BID

CITY of COLFAX
CALIFORNIA

EAST OAK STREET SIDEWALK IMPROVEMENTS

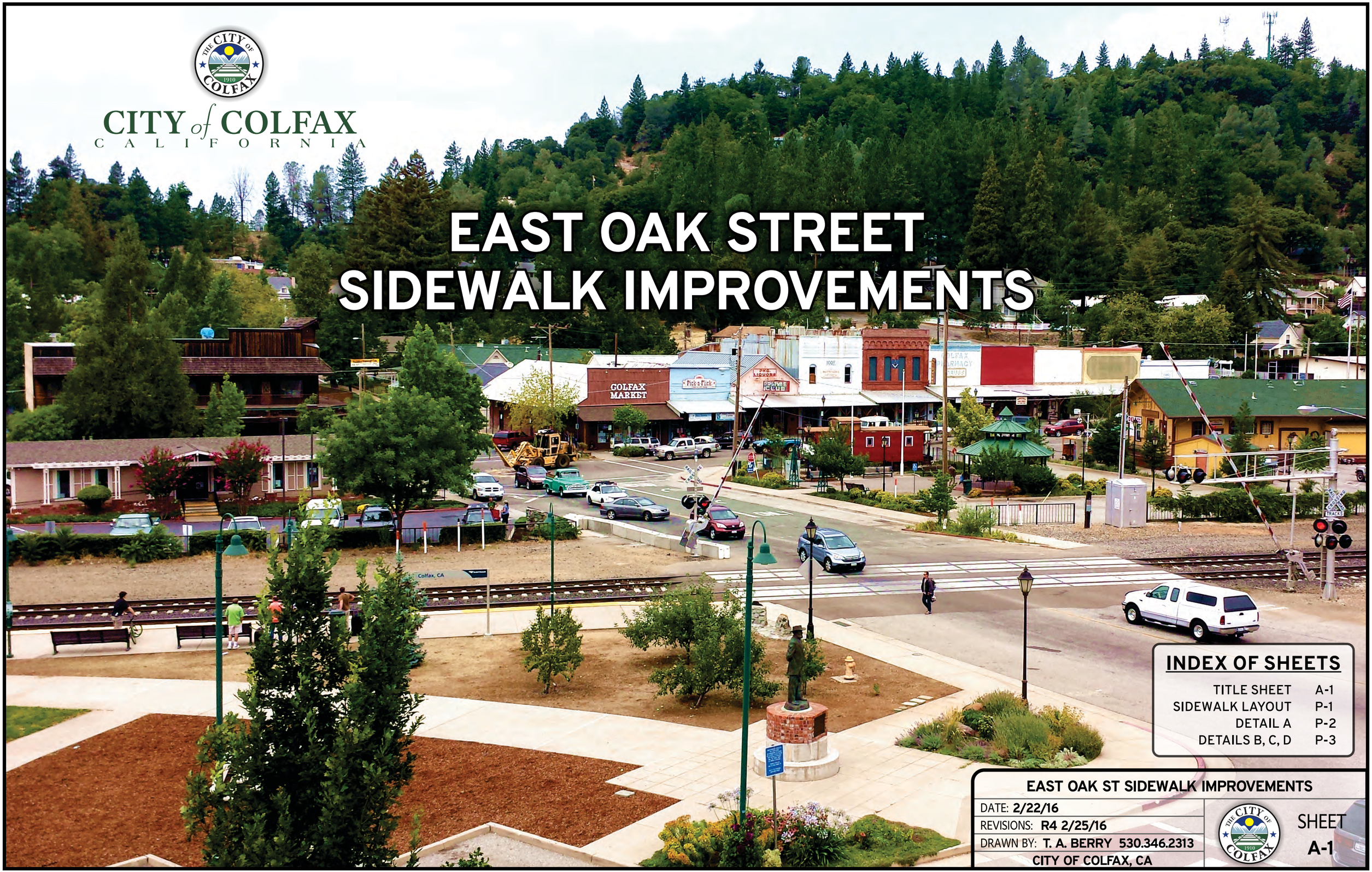

INDEX OF SHEETS

TITLE SHEET	A-1
SIDEWALK LAYOUT	P-1
DETAIL A	P-2
DETAILS B, C, D	P-3

EAST OAK ST SIDEWALK IMPROVEMENTS

DATE: **2/22/16**
REVISIONS: **R4 2/25/16**
DRAWN BY: **T. A. BERRY 530.346.2313**
CITY OF COLFAX, CA

SHEET
A-1

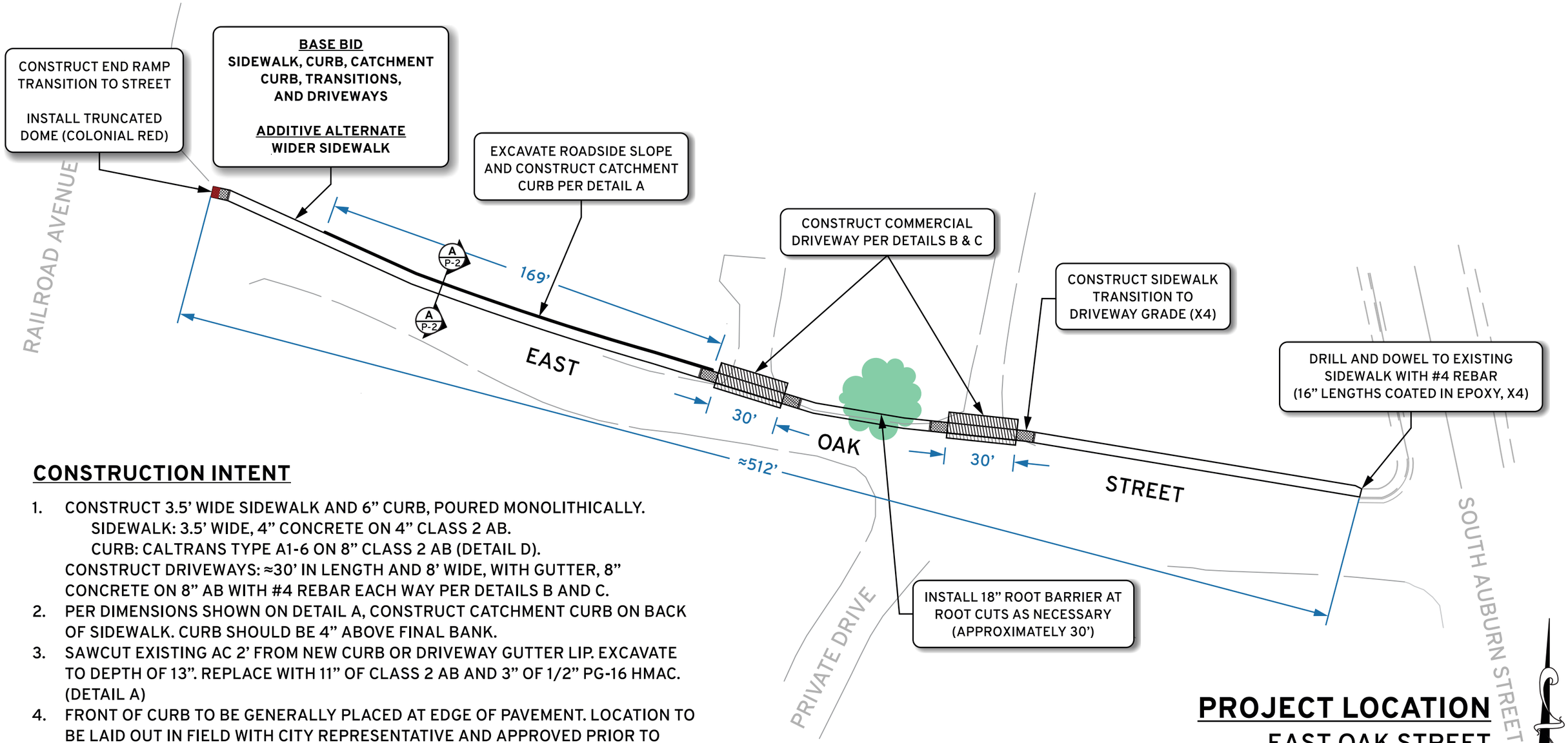

CONSTRUCTION INTENT

1. CONSTRUCT 3.5' WIDE SIDEWALK AND 6" CURB, POURED MONOLITHICALLY.
   SIDEWALK: 3.5' WIDE, 4" CONCRETE ON 4" CLASS 2 AB.
   CURB: CALTRANS TYPE A1-6 ON 8" CLASS 2 AB (DETAIL D).
   CONSTRUCT DRIVEWAYS: ≈30' IN LENGTH AND 8' WIDE, WITH GUTTER, 8" CONCRETE ON 8" AB WITH #4 REBAR EACH WAY PER DETAILS B AND C.
2. PER DIMENSIONS SHOWN ON DETAIL A, CONSTRUCT CATCHMENT CURB ON BACK OF SIDEWALK. CURB SHOULD BE 4" ABOVE FINAL BANK.
3. SAWCUT EXISTING AC 2' FROM NEW CURB OR DRIVEWAY GUTTER LIP. EXCAVATE TO DEPTH OF 13". REPLACE WITH 11" OF CLASS 2 AB AND 3" OF 1/2" PG-16 HMAC. (DETAIL A)
4. FRONT OF CURB TO BE GENERALLY PLACED AT EDGE OF PAVEMENT. LOCATION TO BE LAID OUT IN FIELD WITH CITY REPRESENTATIVE AND APPROVED PRIOR TO CONSTRUCTION.
5. REMOVE VEGETATION AND EXCAVATE ROADSIDE SLOPE AS NECESSARY.

ADDITIVE ALTERNATE

1. CONSTRUCT 4' WIDE SIDEWALK AND 6" CURB, POURED MONOLITHICALLY.

NOTES

1. ALL CONCRETE FINISHED PER ACI 347-04 TYPE A, 4,000 PSI AT 28 DAYS, MINIMUM.
2. ALL AGGREGATE BASE COMPACTED TO TO 95% RELATIVE COMPACTION.
3. TOP 12" OF ALL SUBGRADE COMPACTED TO 95% RELATIVE COMPACTION.

PLAN INTENT

THIS SIDEWALK LAYOUT PROVIDES GENERAL DIMENSION ESTIMATES AND DESIGN INTENTS. THIS IS NOT A DESIGN LEVEL DOCUMENT AND IS NOT INTENDED FOR CONSTRUCTION.

PROJECT LOCATION

EAST OAK STREET
CITY OF COLFAX, CA
PLACER COUNTY

EAST OAK ST SIDEWALK IMPROVEMENTS

DATE: **FEB 22, 2016**
REVISIONS: **R4 2/25/16**
DRAWN BY: **T. A. BERRY 530.346.2313**
CITY OF COLFAX, CA

SHEET **P-1**

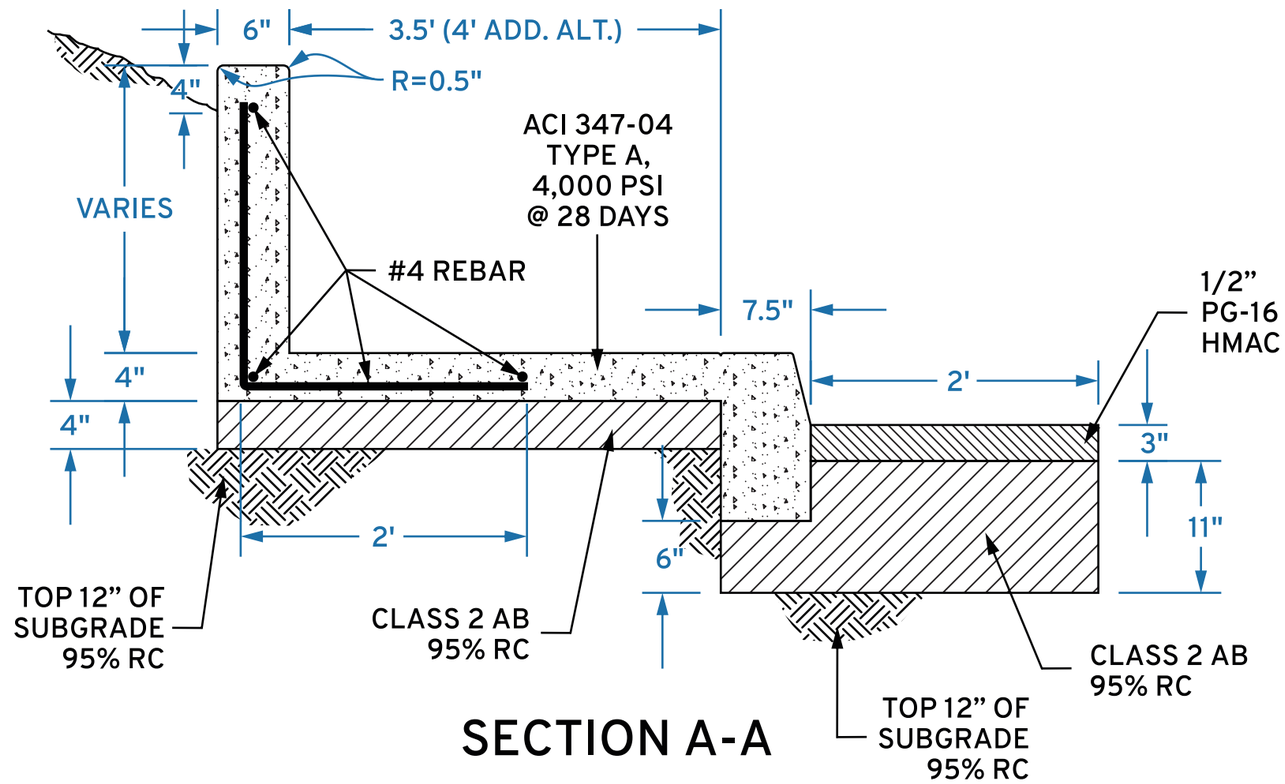

SECTION A-A

NOTE:

1. CATCHMENT CURB TO BE POURED MONOLITHICALLY WITH SIDEWALK AND CURB
2. VERTICAL REBAR TO BE PLACED 30 INCHES ON CENTER
3. HORIZONTAL REBAR IN SIDEWALK TO BE PLACED 1.5 INCHES MINIMUM FROM ALL CONCRETE FACES
4. HORIZONTAL REBAR IN CATCHMENT CURB TO BE PLACED 2.5 INCHES MINIMUM FROM ALL CONCRETE FACES
5. BACKFILL CATCHMENT CURB NO GREATER THAN 4 INCHES FROM TOP OF CATCHMENT CURB.
6. MAXIMUM WALL HEIGHT, 2 FEET ABOVE TOP OF SIDEWALK
7. DETAIL DOES NOT DEPICT SLOPES

A / P-1 MONOLITHIC CATCHMENT CURB, SIDEWALK, AND CURB

NO SCALE

EAST OAK ST SIDEWALK IMPROVEMENTS

DATE: **FEB 22, 2016**

REVISIONS: **R4 2/25/16**

DRAWN BY: **T. A. BERRY 530.346.2313**

CITY OF COLFAX, CA

SHEET **P-2**

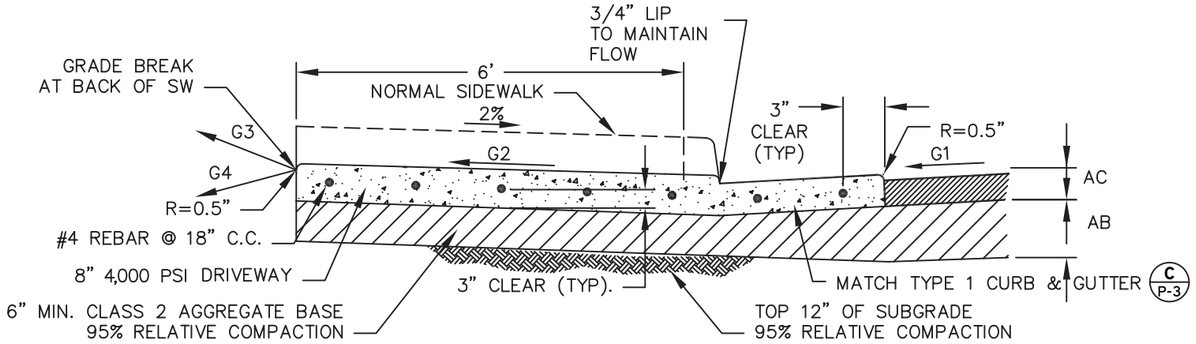

SECTION A-A

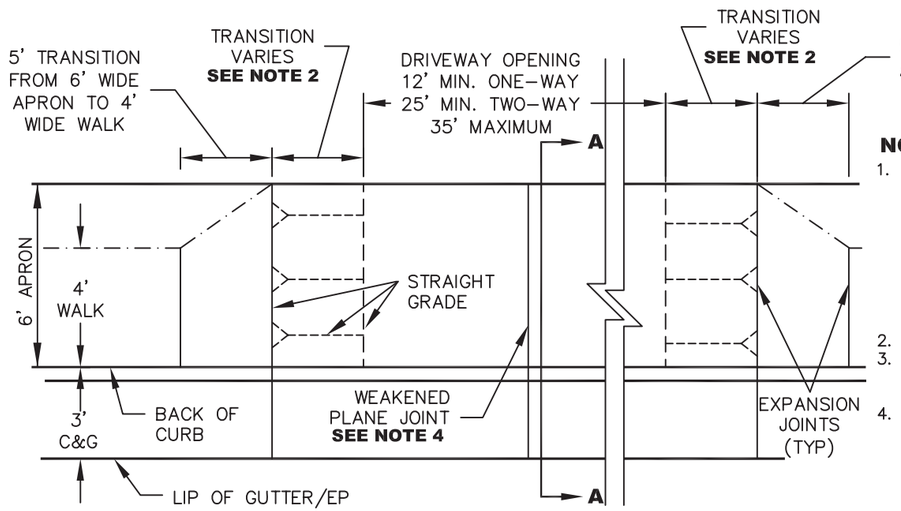

PLAN VIEW

NOTES:

1. MAXIMUM GRADES FOR DRIVEWAYS SHALL BE AS FOLLOWS AND ARE BASED ON A −2% (G1) ROAD CROSS SLOPE:
   G2 = +1% TO +2%
   G3 & G4 = AS DETERMINED BY A MAXIMUM 5% ALGEBRAIC GRADE DIFFERENCE FOR A GRADE BREAK OR GRADIENT OF A VERTICAL CURVE (L= 30 FT. MINIMUM, BEGINNING AT GRADE BREAK).
2. THE MAXIMUM GRADE IS 8.33%.
3. EXPANSION AND WEAKENED PLANE JOINTS PER SECTION 73−1.05 OF THE PLACER COUNTY GENERAL SPECIFICATIONS.
4. IF THE OPENING OF THE PCC DRIVEWAY APRON IS 14 FT. OR GREATER, THE WEAKENED PLANE JOINT(S) SHALL BECOME EXPANSION JOINT(S) AT A MINIMUM SPACING OF 10 FT. CENTER TO CENTER.

B / P-1 COMMERCIAL DRIVEWAY

NO SCALE

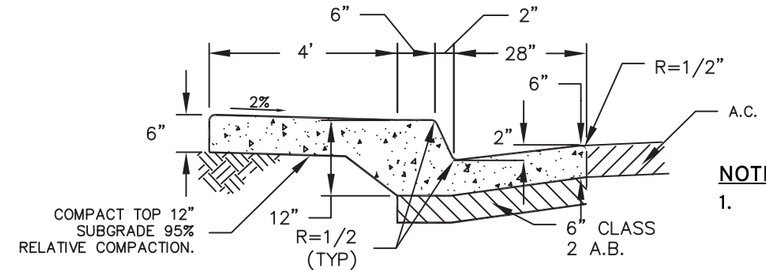

TYPE 1

NOTE:

1. EXPANSION AND WEAKENED PLANE JOINT PER SECTION 73-1.05 OF THE PLACER COUNTY GENERAL SPECIFICATIONS

C / P-1 TYPE 1 CURB AND GUTTER

NO SCALE

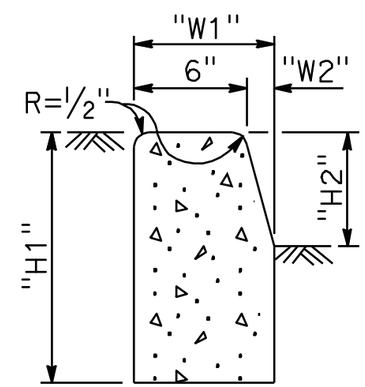

TYPE A1 CURBS

SEE TABLE A

TABLE A

CURB TYPE	DIMENSIONS			
	"H1"	"H2"	"W1"	"W2"
A1-6	1'-2"	6"	7½"	1½"

CURB QUANTITIES

TYPE	CUBIC YARDS PER LINEAR FOOT
A1-6	0.02585

NOTE:

1. CURB NOT FREESTANDING
2. DETAIL SHOWN FOR DIMENSIONS ONLY

D / P-1 CURB

NO SCALE

EAST OAK ST SIDEWALK IMPROVEMENTS

DATE: **FEB 22, 2016**
REVISIONS: **R4 2/25/16**
DRAWN BY: **T. A. BERRY 530.346.2313**
CITY OF COLFAX, CA

SHEET
P-3